A6

DIMENSIONS

10/2021

PDS

UPGRADE THE POWER

1. MODULE DIMENSIONS

1.1 ACB (TOP) MODULE

1.1.1 ACB (TOP) MODULE (STANDART) - 600 DEPTH

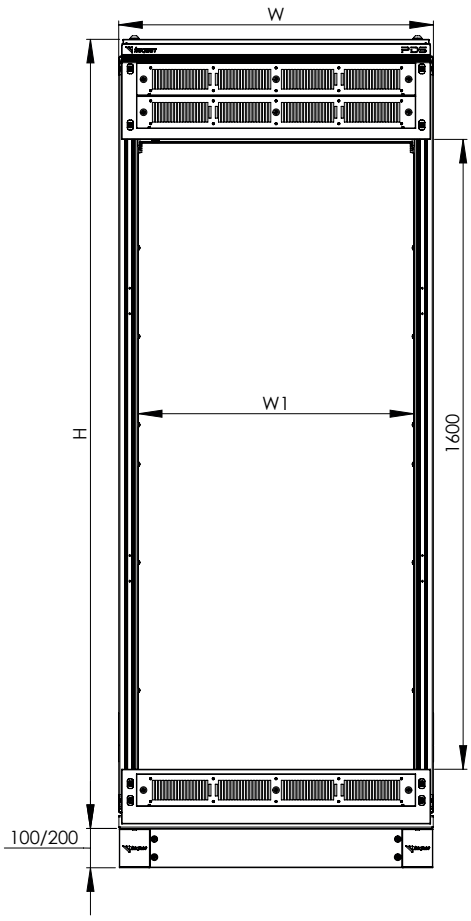

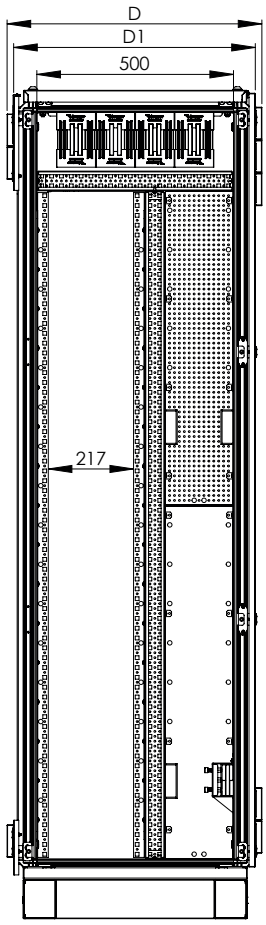

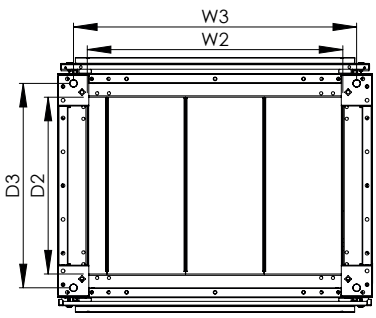

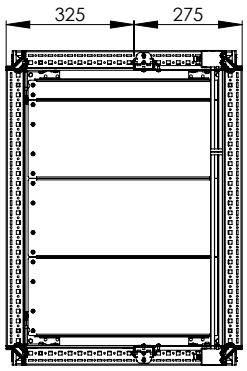

ACB TOP (EXTERNAL)	WITH				HEIGHT	DEPTH			
	W(mm)	W1(mm)	W2(mm)	W3(mm)	H(mm)	D(mm)	D1(mm)	D2(mm)	D3(mm)
600Wx2000Hx600D	600	500	450	520	2007	648	615	450	520
800Wx2000Hx600D	800	700	650	720	2007	648	615	450	520

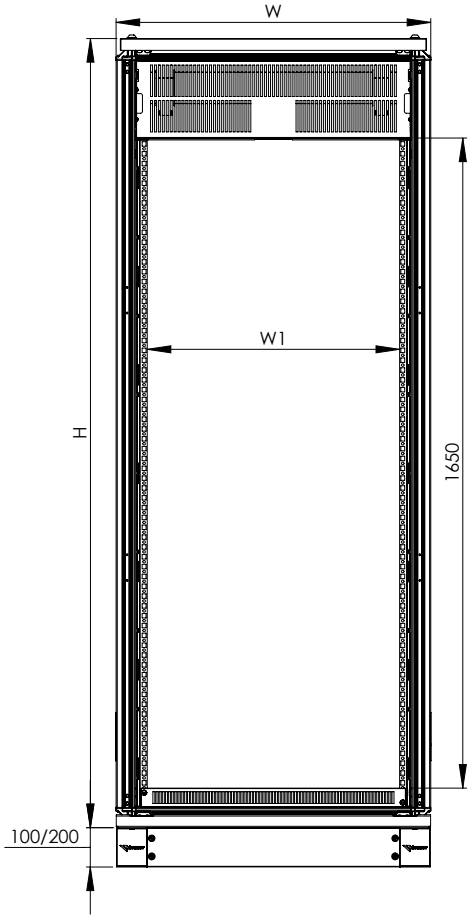

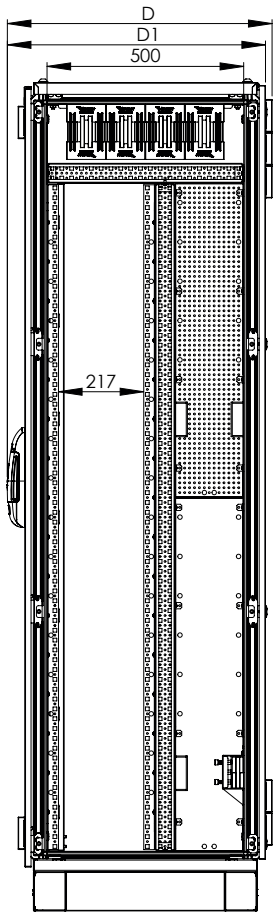

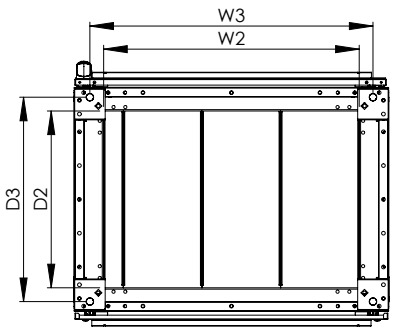

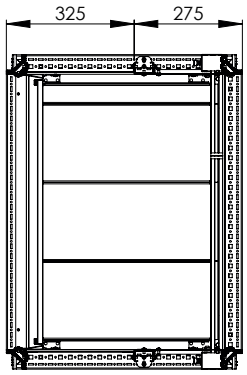

ACB TOP (INTERNAL)	WITH				HEIGHT	DEPTH			
	W(mm)	W1(mm)	W2(mm)	W3(mm)	H(mm)	D(mm)	D1(mm)	D2(mm)	D3(mm)
600Wx2000Hx600D	600	442	450	520	2007	673	656	450	520
800Wx2000Hx600D	800	642	650	720	2007	673	656	450	520

1.1.2 ACB (TOP) MODULE (STANDART) - 800 DEPTH

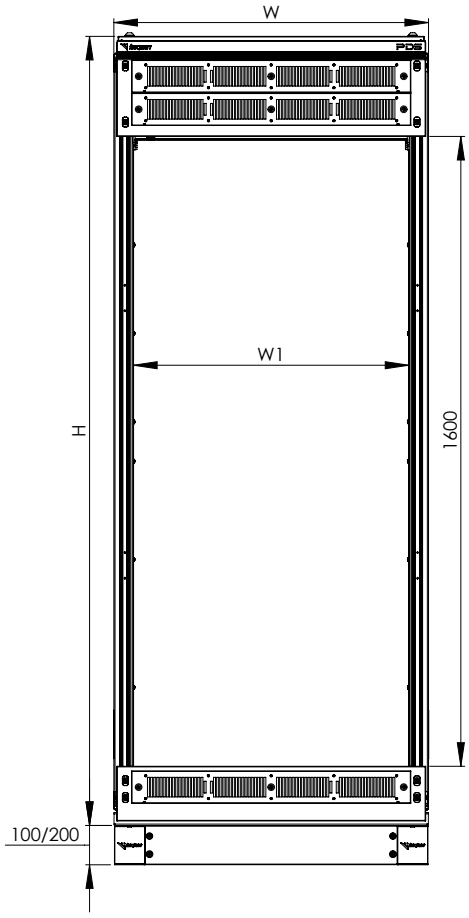

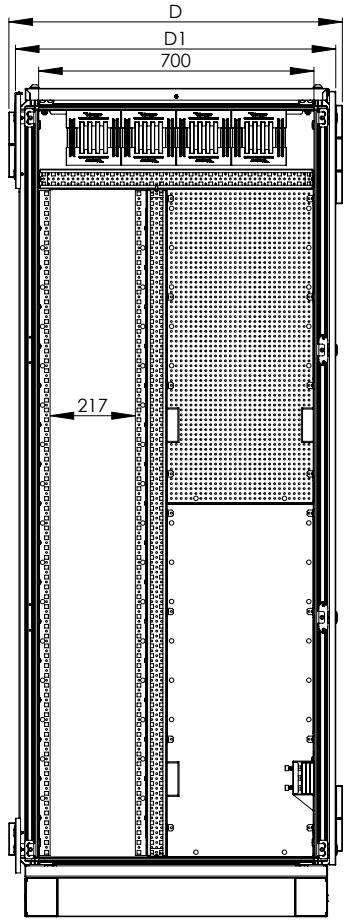

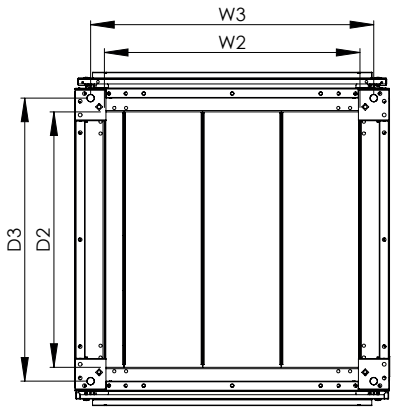

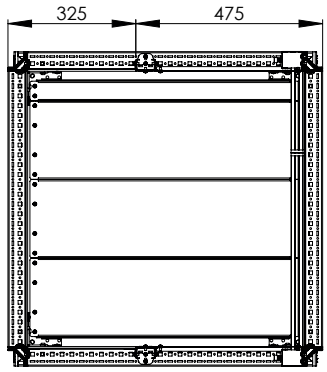

ACB TOP (EXTERNAL)	WITH				HEIGHT	DEPTH			
	W(mm)	W1(mm)	W2(mm)	W3(mm)	H(mm)	D(mm)	D1(mm)	D2(mm)	D3(mm)
600Wx2000Hx800D	600	500	450	520	2007	848	815	650	720
800Wx2000Hx800D	800	700	650	720	2007	848	815	650	720

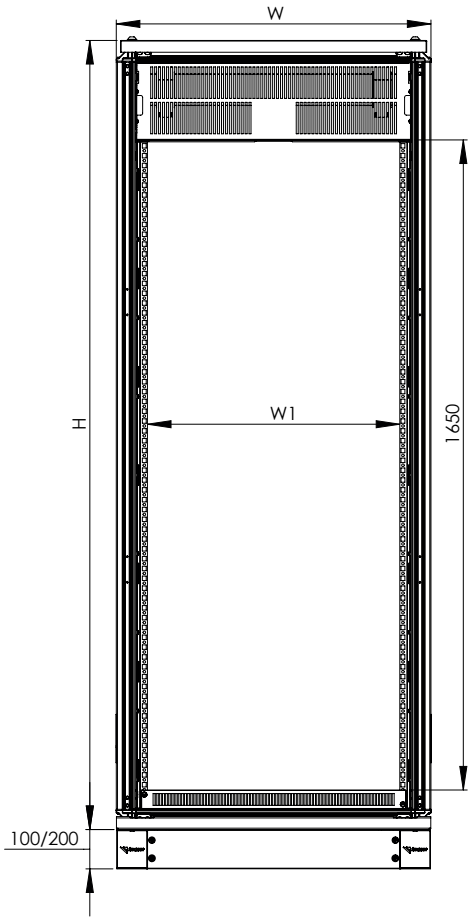

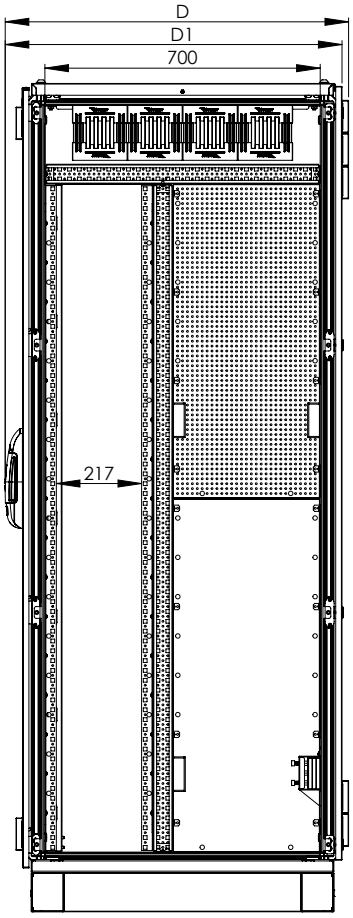

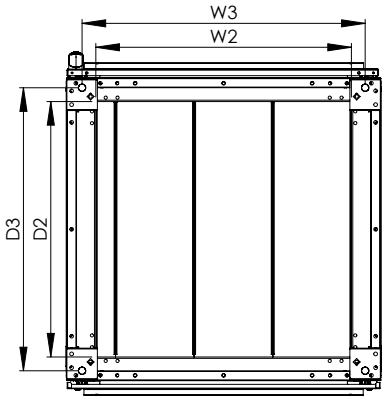

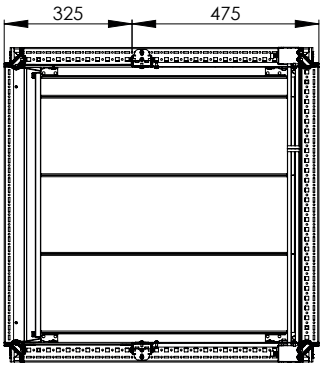

ACB TOP (INTERNAL)	WITH				HEIGHT	DEPTH			
	W(mm)	W1(mm)	W2(mm)	W3(mm)	H(mm)	D(mm)	D1(mm)	D2(mm)	D3(mm)
600Wx2000Hx800D	600	442	450	520	2007	873	856	650	720
800Wx2000Hx800D	800	642	650	720	2007	873	856	650	720

1.1.3 ACB (TOP) MODULE (WITH CABLING EXTENSION) - 600 DEPTH

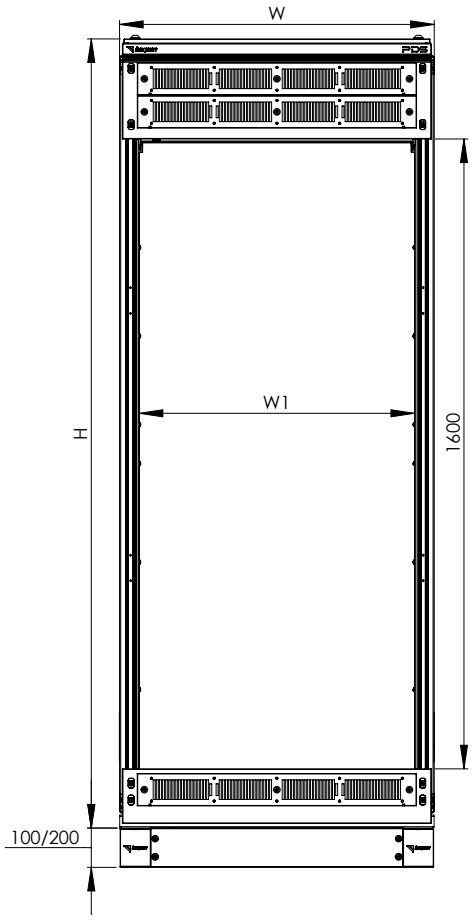

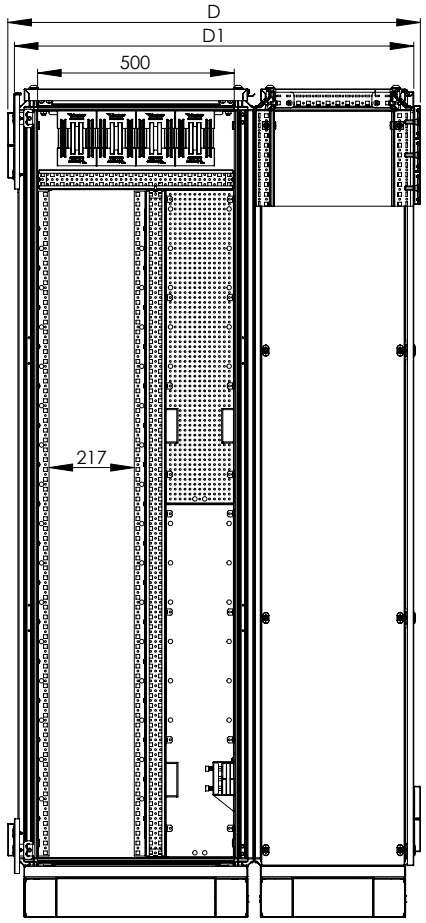

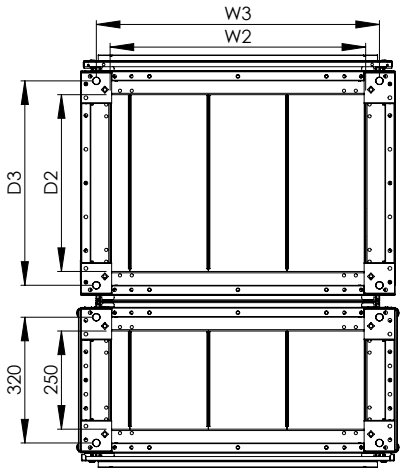

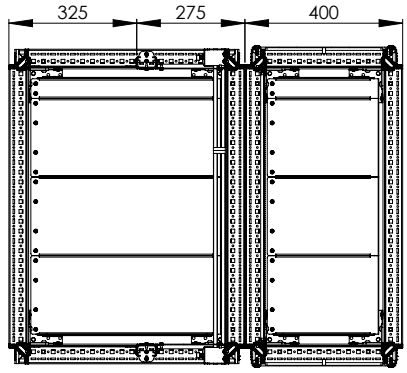

ACB REAR CABLING TOP (EXTERNAL)	WITH				HEIGHT	DEPTH			
	W(mm)	W1(mm)	W2(mm)	W3(mm)	H(mm)	D(mm)	D1(mm)	D2(mm)	D3(mm)
600Wx2000Hx600D	600	500	450	520	2007	1050	1015	450	520
800Wx2000Hx600D	800	700	650	720	2007	1050	1015	450	520

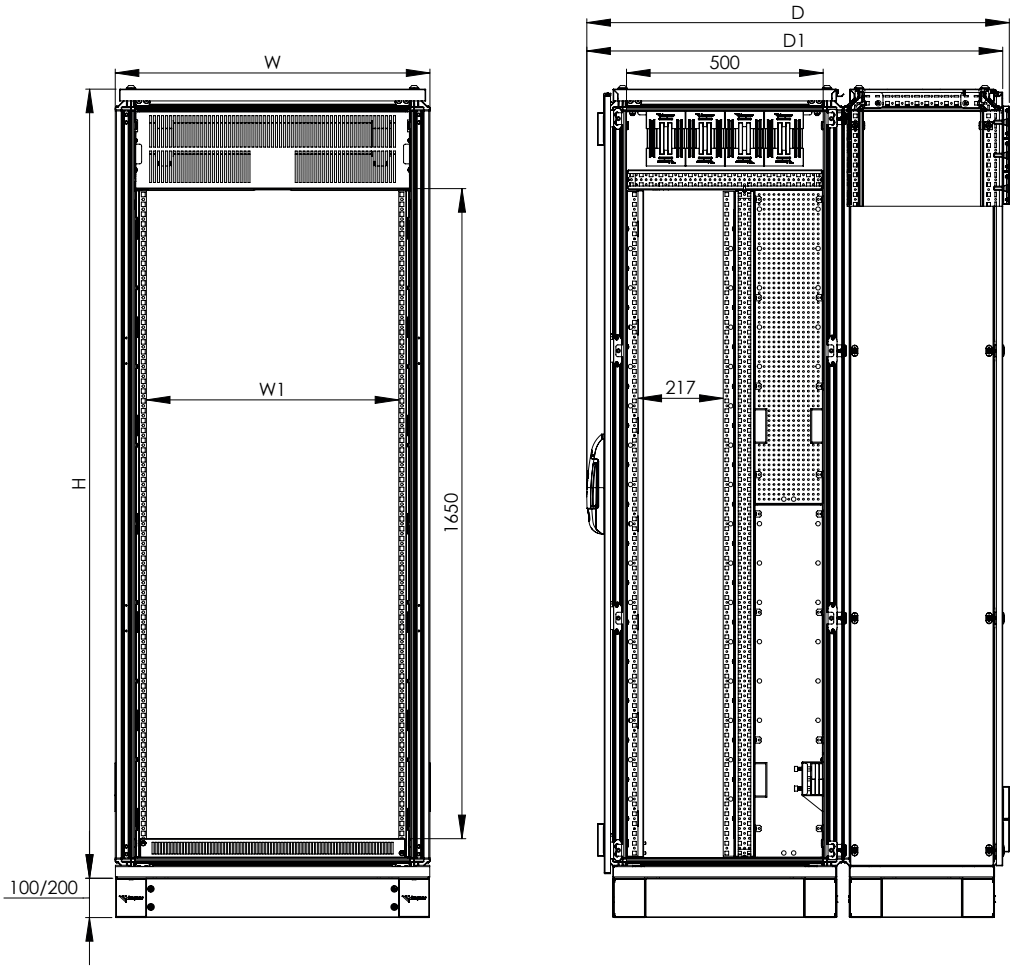

ACB REAR CABLING TOP (INTERNAL)	WITH				HEIGHT	DEPTH			
	W(mm)	W1(mm)	W2(mm)	W3(mm)	H(mm)	D(mm)	D1(mm)	D2(mm)	D3(mm)
600Wx2000Hx600D	600	442	450	520	2007	1074	1058	450	520
800Wx2000Hx600D	800	642	650	720	2007	1074	1058	450	520

1.1.4 ACB (TOP) MODULE (WITH CABLING EXTENSION) - 800 DEPTH

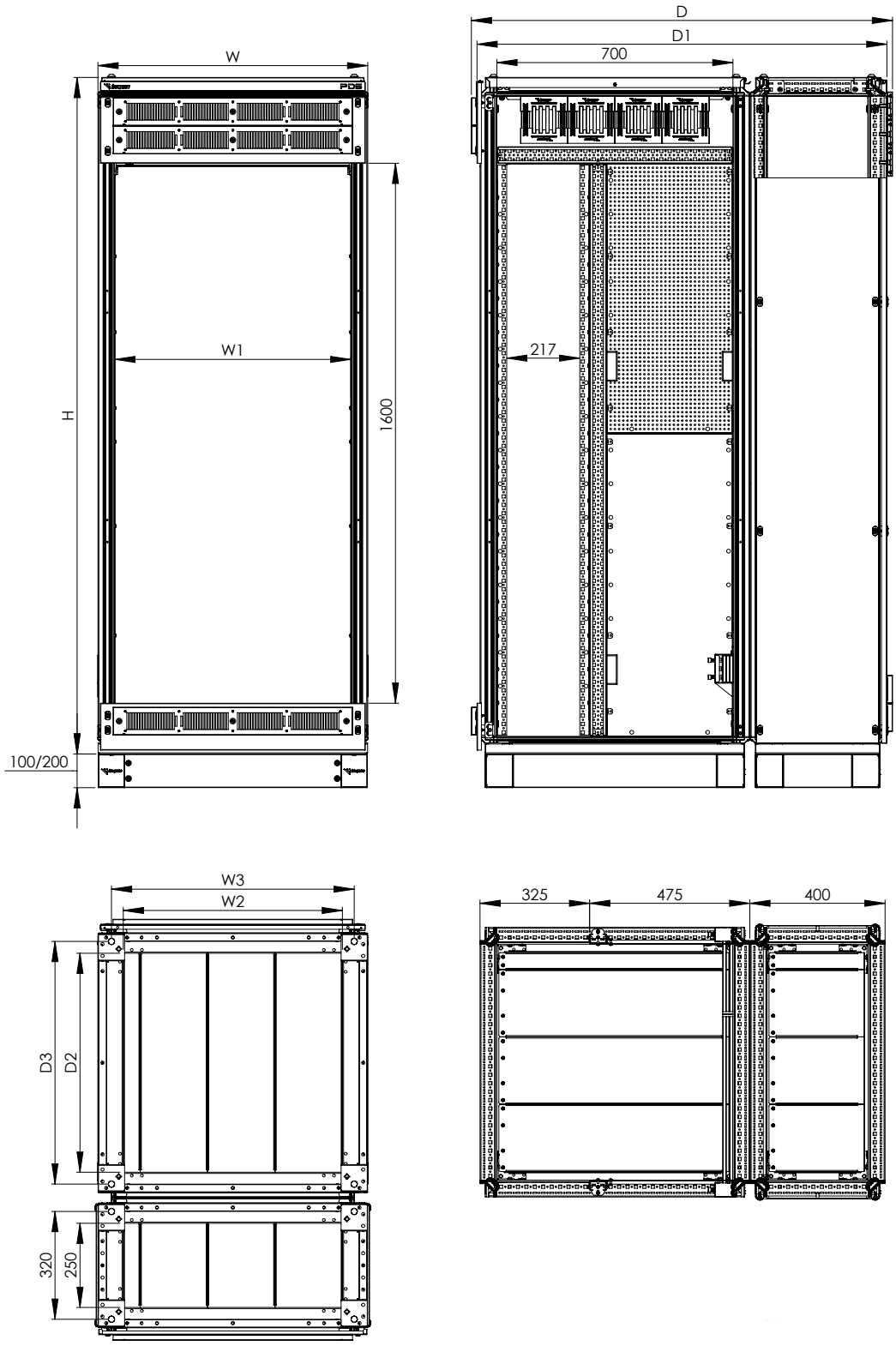

ACB REAR CABLING TOP (EXTERNAL)	WITH				HEIGHT	DEPTH			
	W(mm)	W1(mm)	W2(mm)	W3(mm)	H(mm)	D(mm)	D1(mm)	D2(mm)	D3(mm)
600Wx2000Hx800D	600	500	450	520	2007	1250	1215	650	720
800Wx2000Hx800D	800	700	650	720	2007	1250	1215	650	720

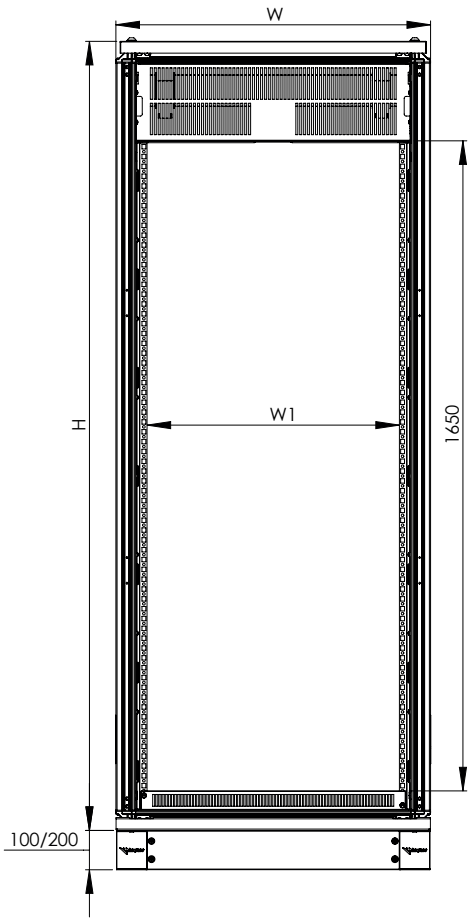

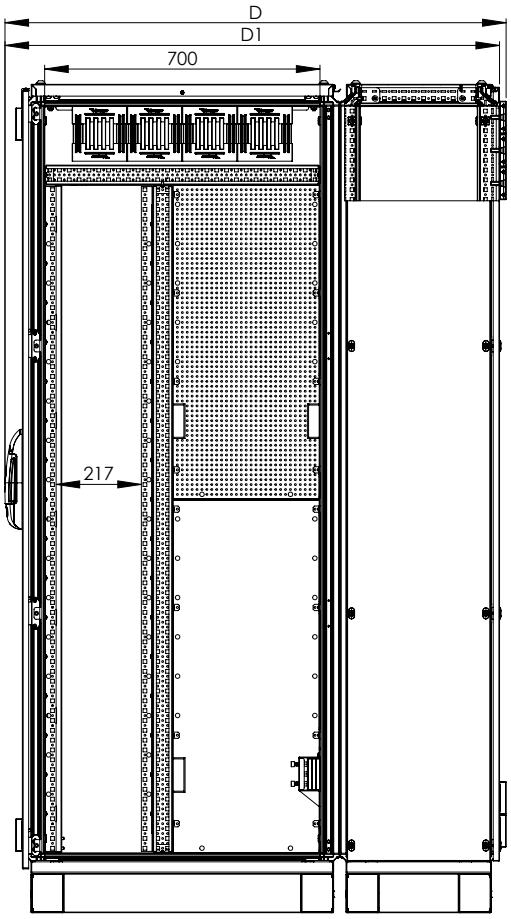

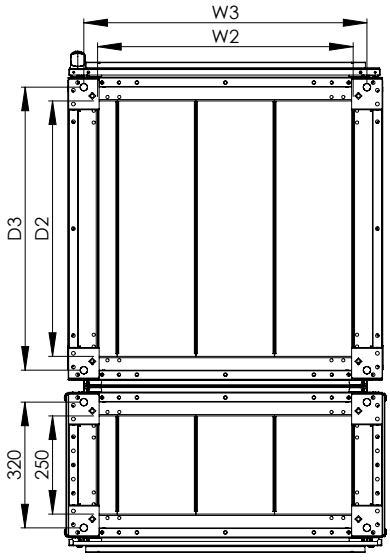

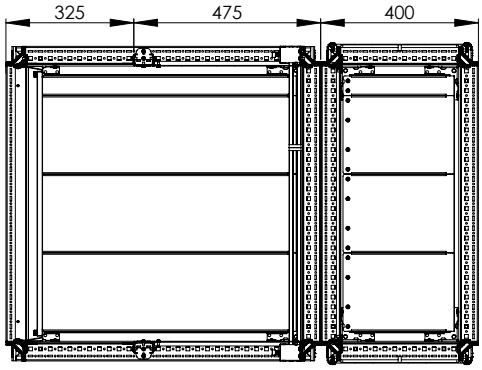

ACB REAR CABLING TOP (INTERNAL)	WITH				HEIGHT	DEPTH			
	W(mm)	W1(mm)	W2(mm)	W3(mm)	H(mm)	D(mm)	D1(mm)	D2(mm)	D3(mm)
600Wx2000Hx800D	600	442	450	520	2007	1074	1058	450	520
800Wx2000Hx800D	800	642	650	720	2007	1074	1058	450	520

1.2 ACB (MID) MODULE

1.2.1 ACB (MID) MODULE (STANDART) - 600 DEPTH

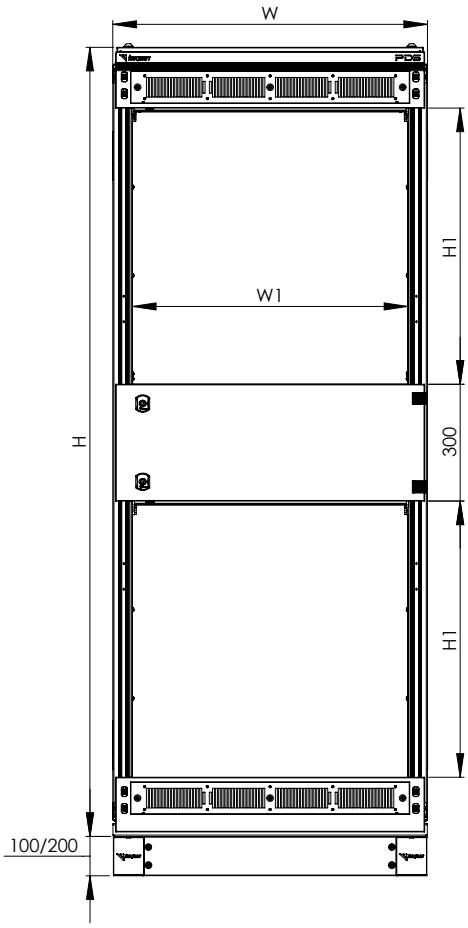

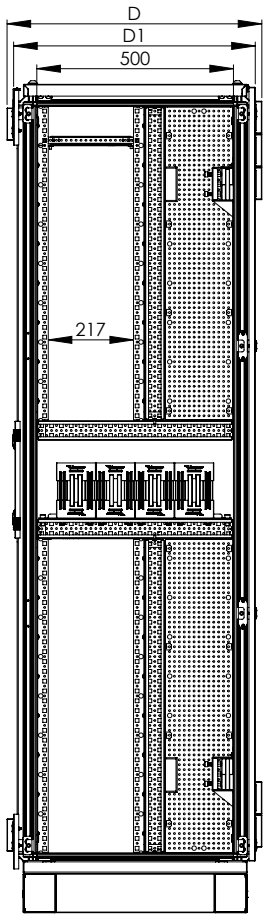

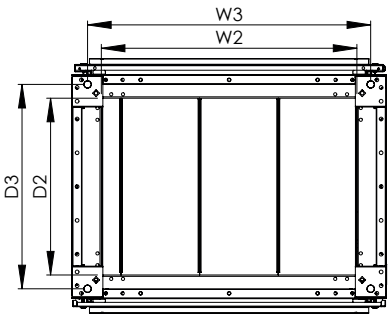

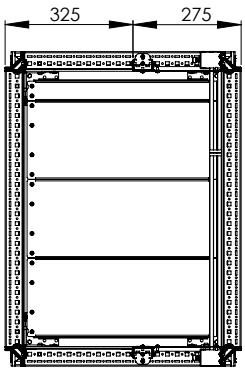

ACB MID (EXTERNAL)	WITH				HEIGHT		DEPTH			
	W(mm)	W1(mm)	W2(mm)	W3(mm)	H(mm)	H1(mm)	D(mm)	D1(mm)	D2(mm)	D3(mm)
600Wx2000Hx600D	600	500	450	520	2007	700	648	615	450	520
800Wx2000Hx600D	800	700	650	720	2007	700	648	615	450	520

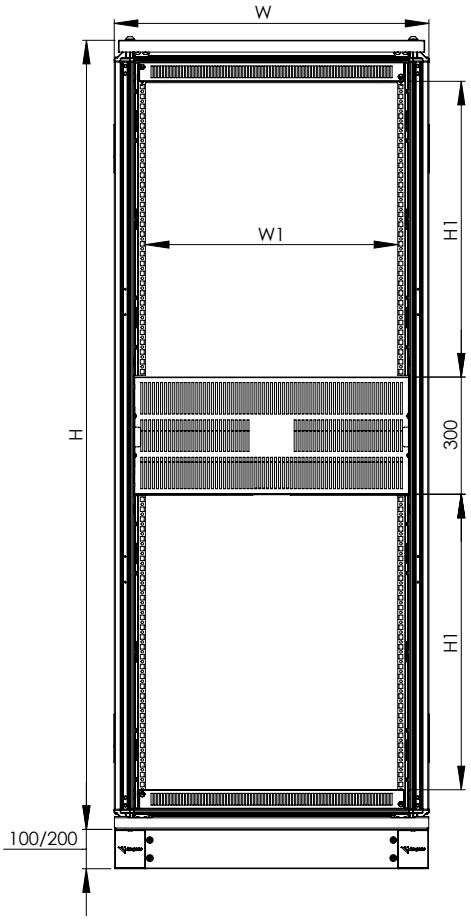

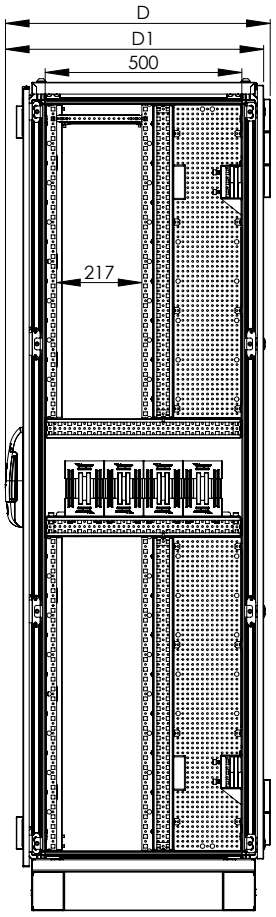

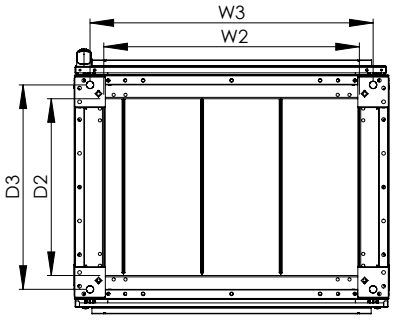

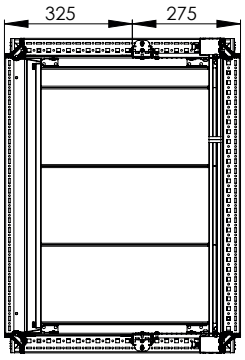

ACB MID (INTERNAL)	WITH				HEIGHT		DEPTH			
	W(mm)	W1(mm)	W2(mm)	W3(mm)	H(mm)	H1(mm)	D(mm)	D1(mm)	D2(mm)	D3(mm)
600Wx2000Hx600D	600	442	450	520	2007	750	673	656	450	520
800Wx2000Hx600D	800	642	650	720	2007	750	673	656	450	520

1.2.2 ACB (MID) MODULE (STANDART) - 800 DEPTH

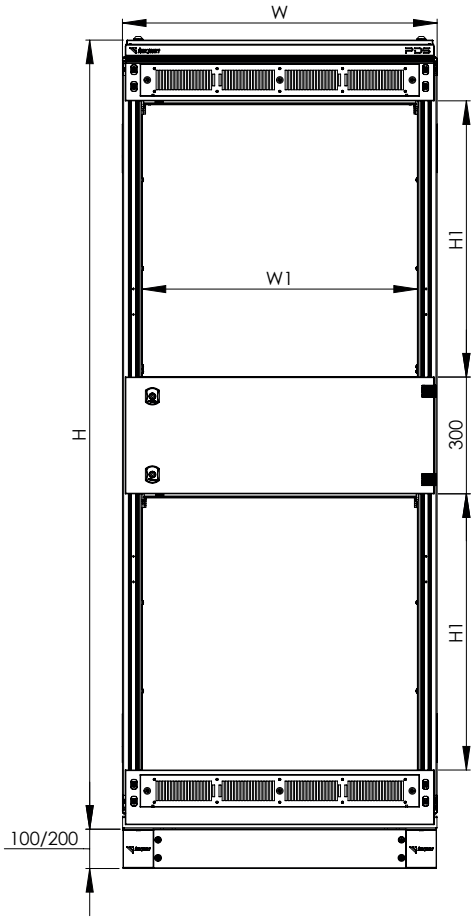

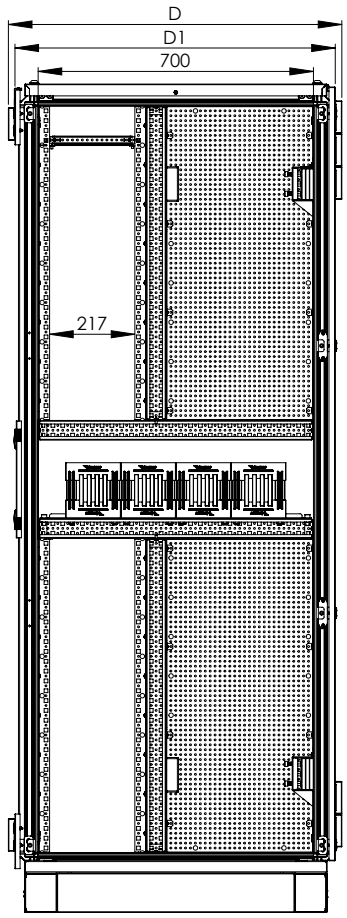

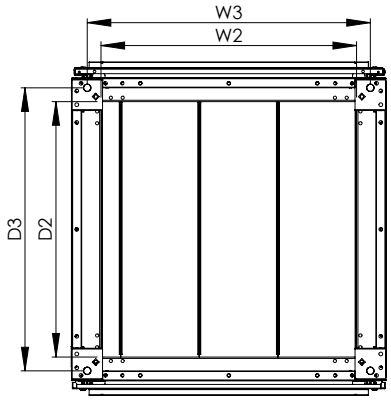

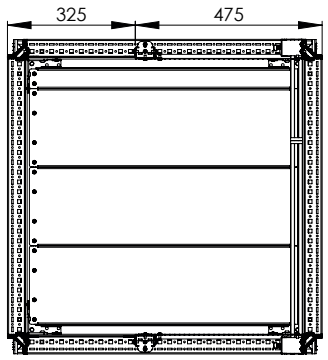

ACB MID (EXTERNAL)	WITH				HEIGHT		DEPTH			
	W(mm)	W1(mm)	W2(mm)	W3(mm)	H(mm)	H1(mm)	D(mm)	D1(mm)	D2(mm)	D3(mm)
600Wx2000Hx800D	600	500	450	520	2007	700	848	815	650	720
800Wx2000Hx800D	800	700	650	720	2007	700	848	815	650	720

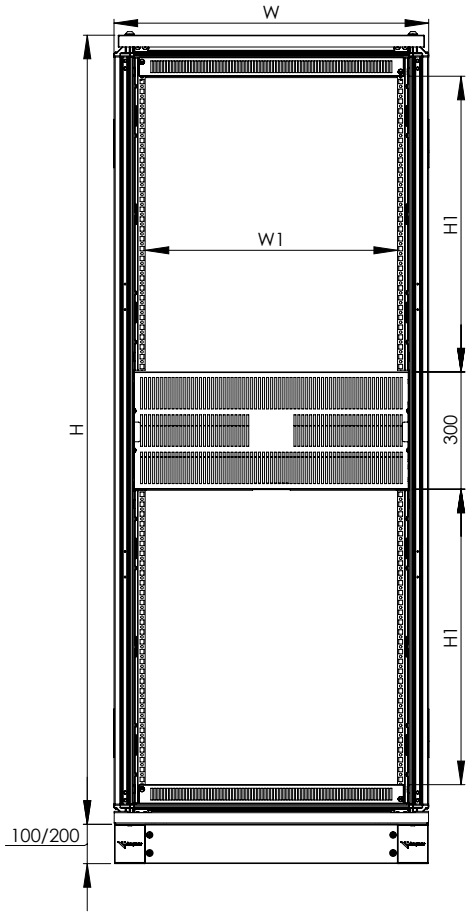

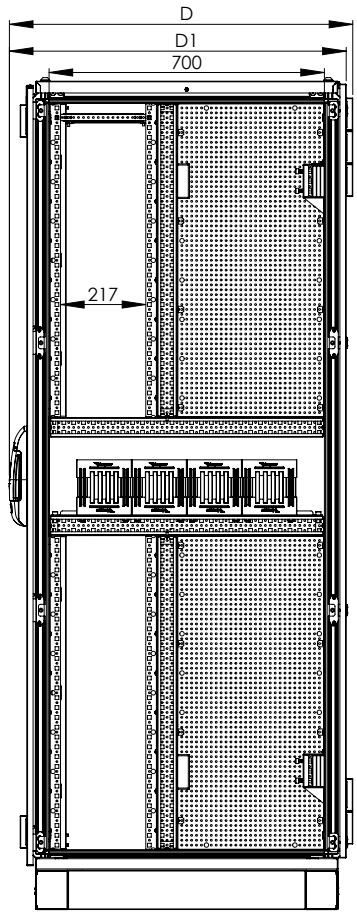

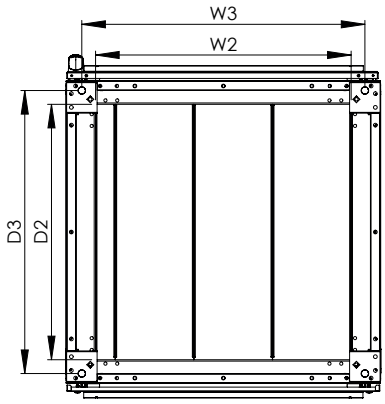

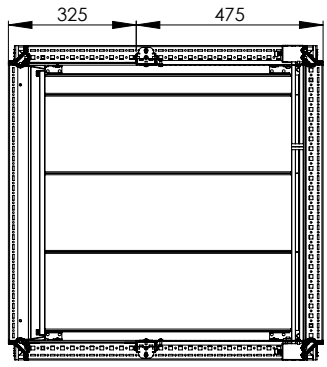

ACB MID (INTERNAL)	WITH				HEIGHT		DEPTH			
	W(mm)	W1(mm)	W2(mm)	W3(mm)	H(mm)	H1(mm)	D(mm)	D1(mm)	D2(mm)	D3(mm)
600Wx2000Hx800D	600	442	450	520	2007	750	873	856	650	720
800Wx2000Hx800D	800	642	650	720	2007	750	873	856	650	720

1.2.3 ACB (MID) MODULE (WITH CABLING EXTENSION) - 600 DEPTH

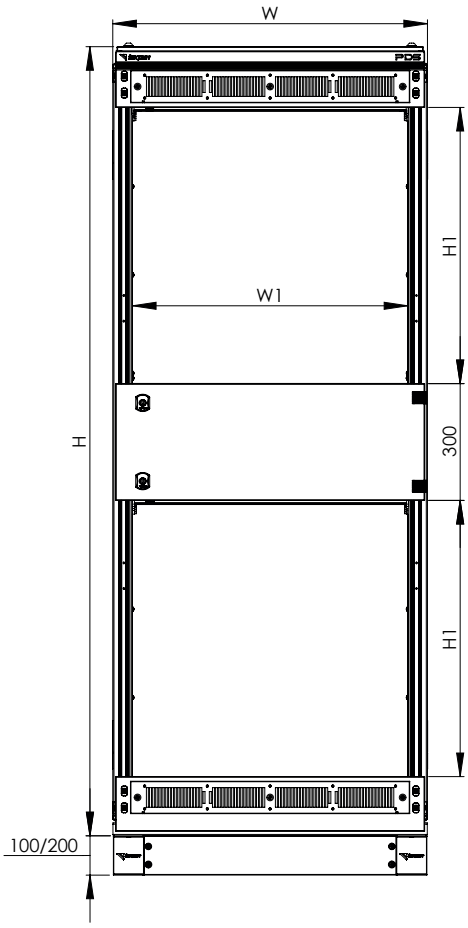

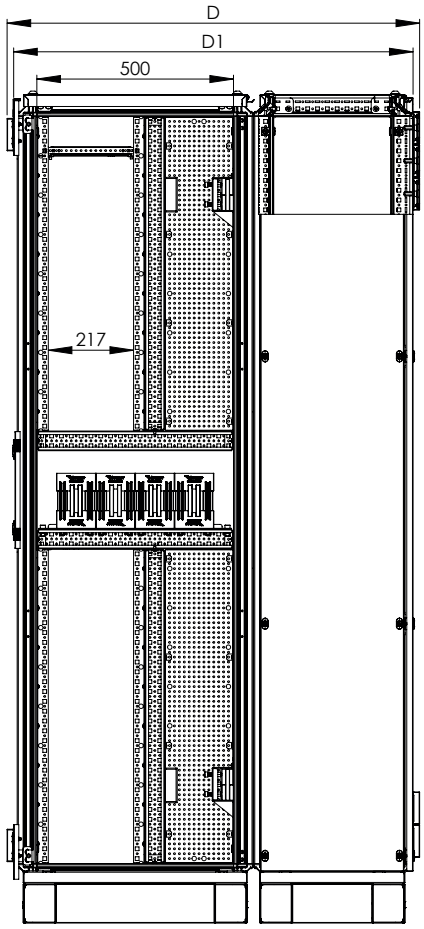

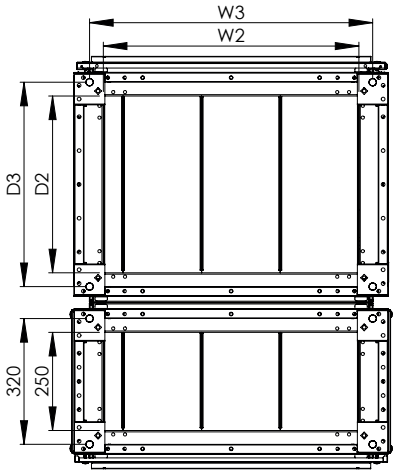

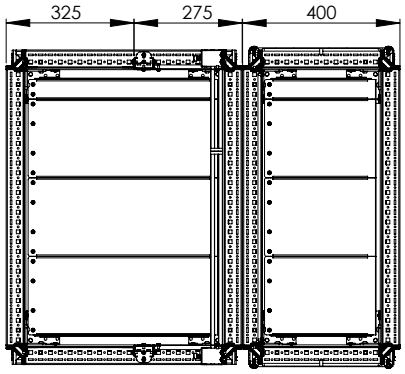

ACB REAR CABLING MID (EXTERNAL)	WITH				HEIGHT		DEPTH			
	W(mm)	W1(mm)	W2(mm)	W3(mm)	H(mm)	H1(mm)	D(mm)	D1(mm)	D2(mm)	D3(mm)
600Wx2000Hx600D	600	500	450	520	2007	700	1050	1015	450	520
800Wx2000Hx600D	800	700	650	720	2007	700	1050	1015	450	520

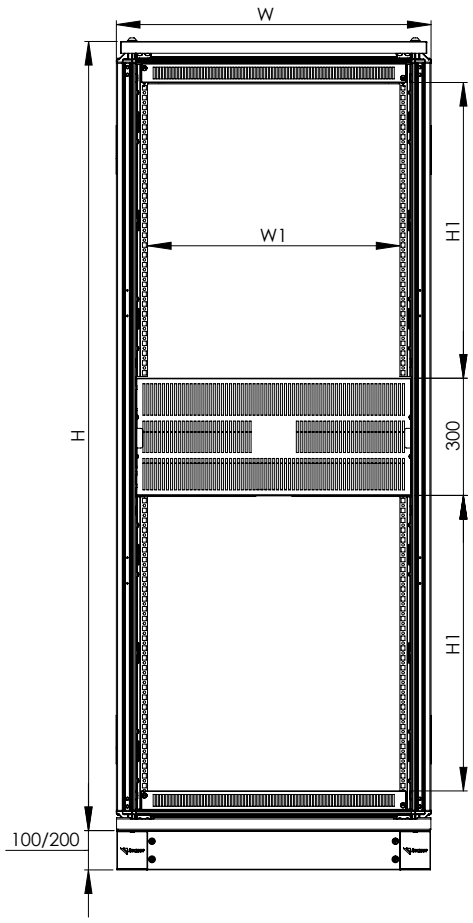

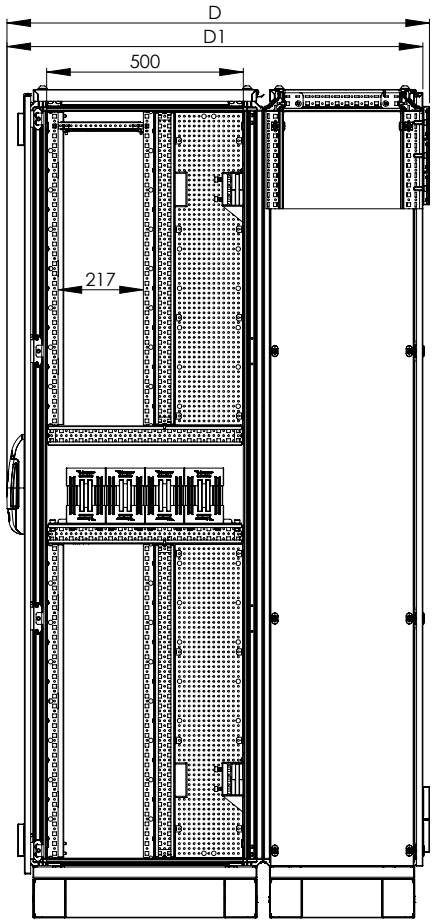

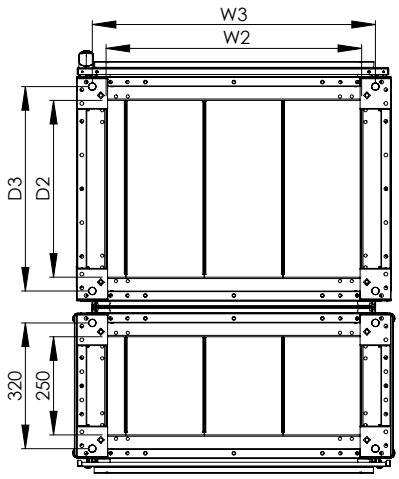

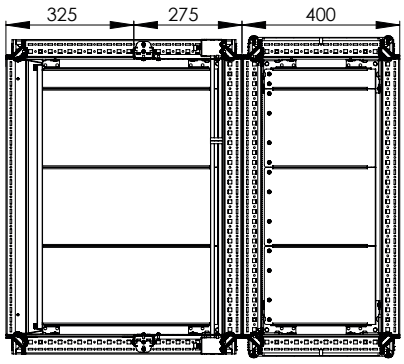

ACB REAR CABLING MID (INTERNAL)	WITH				HEIGHT		DEPTH			
	W(mm)	W1(mm)	W2(mm)	W3(mm)	H(mm)	H1(mm)	D(mm)	D1(mm)	D2(mm)	D3(mm)
600Wx2000Hx600D	600	442	450	520	2007	750	1074	1058	450	520
800Wx2000Hx600D	800	642	650	720	2007	750	1074	1058	450	520

1.2.4 ACB (MID) MODULE (WITH CABLING EXTENSION) - 800 DEPTH

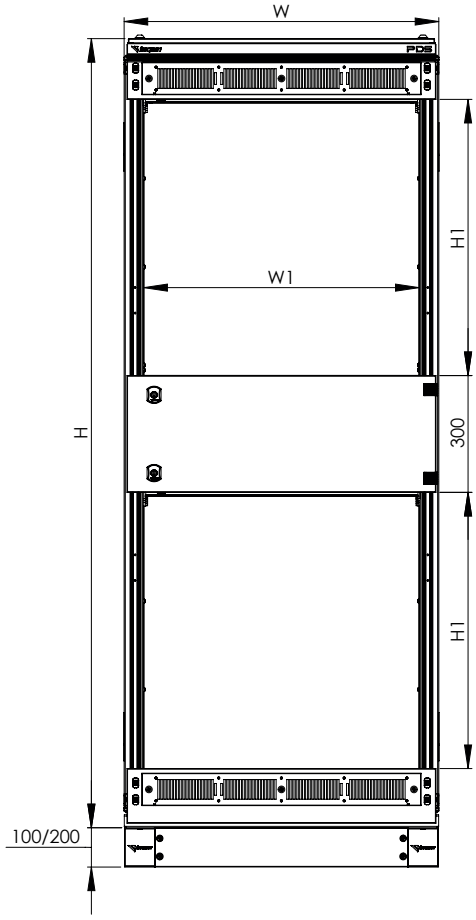

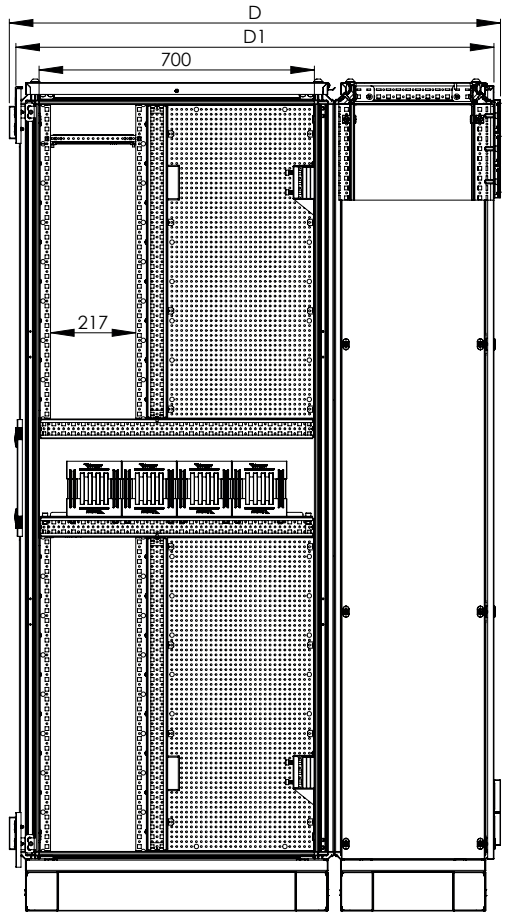

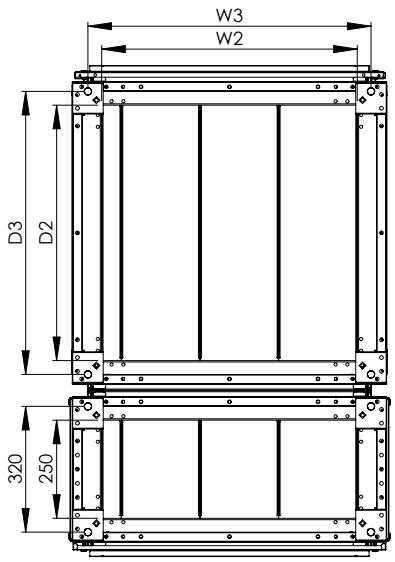

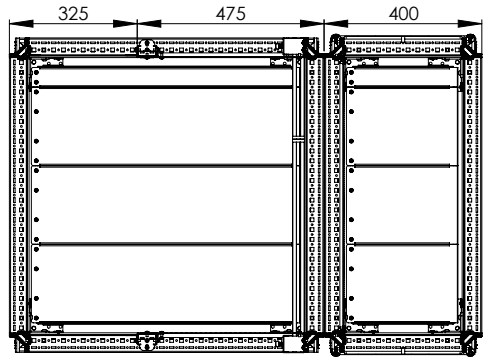

ACB REAR CABLING MID (EXTERNAL)	WITH				HEIGHT		DEPTH			
	W(mm)	W1(mm)	W2(mm)	W3(mm)	H(mm)	H1(mm)	D(mm)	D1(mm)	D2(mm)	D3(mm)
600Wx2000Hx800D	600	500	450	520	2007	700	1250	1215	650	720
800Wx2000Hx800D	800	700	650	720	2007	700	1250	1215	650	720

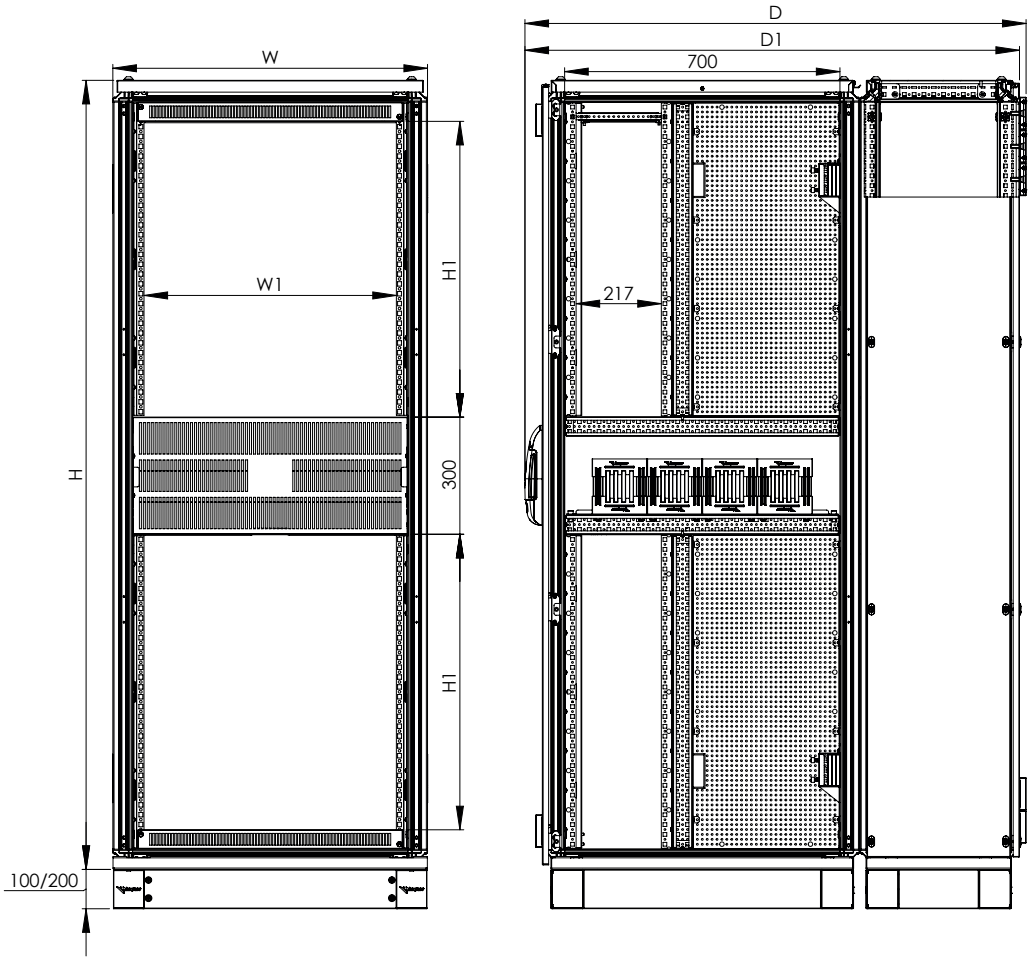

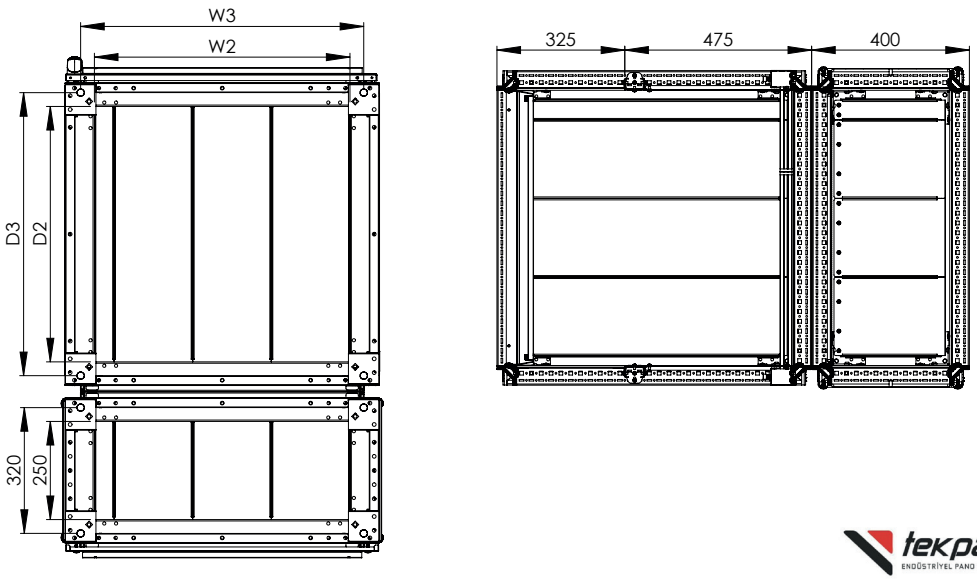

ACB REAR CABLING MID (INTERNAL)	WITH				HEIGHT		DEPTH			
	W(mm)	W1(mm)	W2(mm)	W3(mm)	H(mm)	H1(mm)	D(mm)	D1(mm)	D2(mm)	D3(mm)
600Wx2000Hx800D	600	442	450	520	2007	750	1274	1258	650	720
800Wx2000Hx800D	800	642	650	720	2007	750	1274	1258	650	720

1.3 COUPLING MODULE

1.3.1 COUPLING MODULE - 600 DEPTH

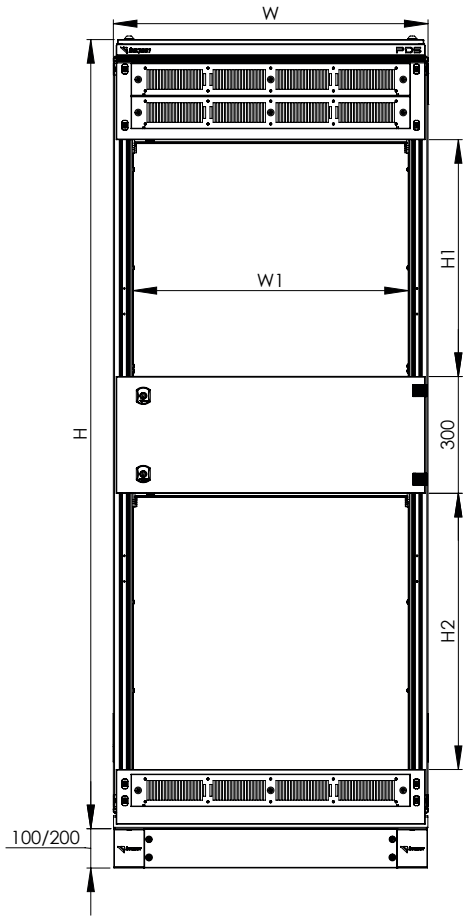

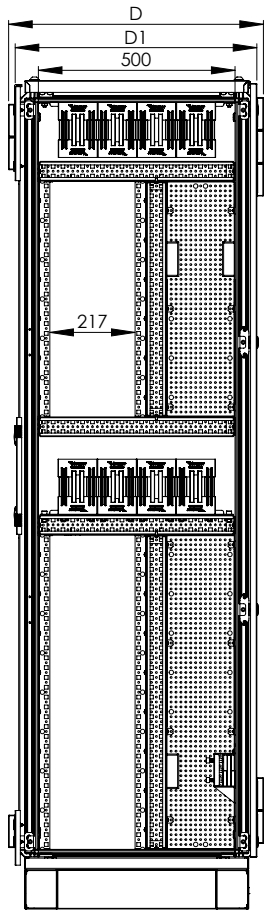

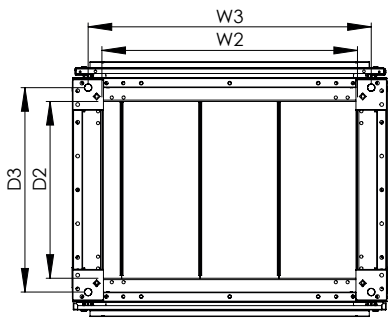

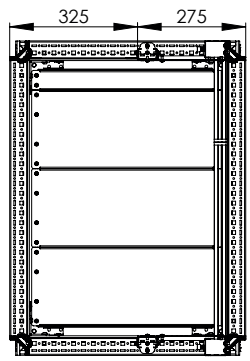

COUPLING (EXTERNAL))	WITH				HEIGHT			DEPTH			
	W(mm)	W1(mm)	W2(mm)	W3(mm)	H(mm)	H1(mm)	H2(mm)	D(mm)	D1(mm)	D2(mm)	D3(mm)
600Wx2000Hx600D	600	500	450	520	2007	600	700	648	615	450	520
800Wx2000Hx600D	800	700	650	720	2007	600	700	648	615	450	520

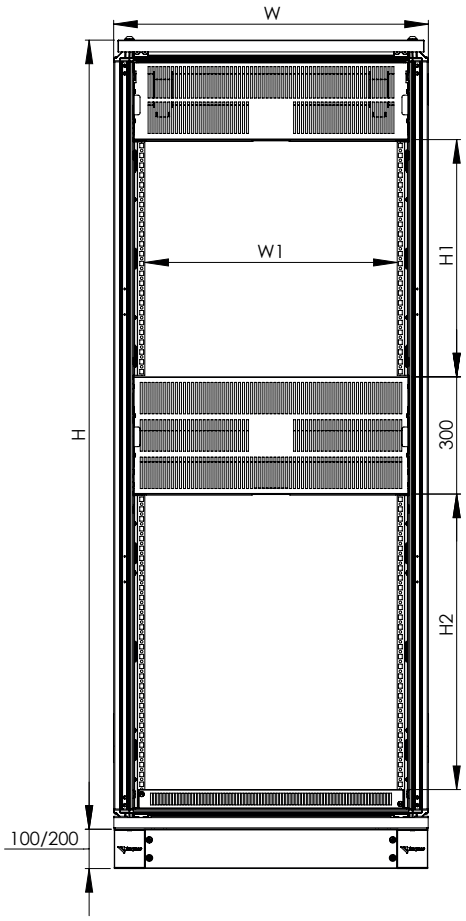

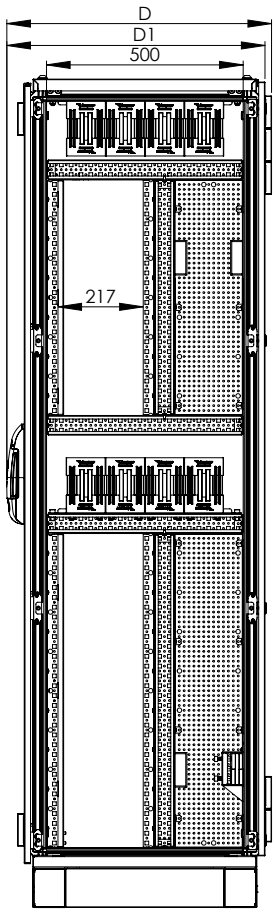

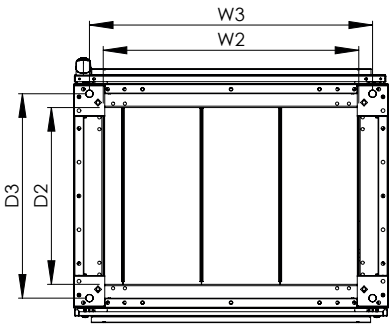

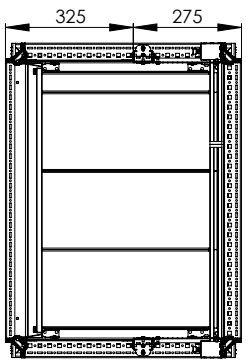

COUPLING (INTERNAL)	WITH				HEIGHT			DEPTH			
	W(mm)	W1(mm)	W2(mm)	W3(mm)	H(mm)	H1(mm)	H2(mm)	D(mm)	D1(mm)	D2(mm)	D3(mm)
600Wx2000Hx600D	600	442	450	520	2007	600	750	673	656	450	520
800Wx2000Hx600D	800	642	650	720	2007	600	750	673	656	450	520

1.3.2 COUPLING MODULE - 800 DEPTH

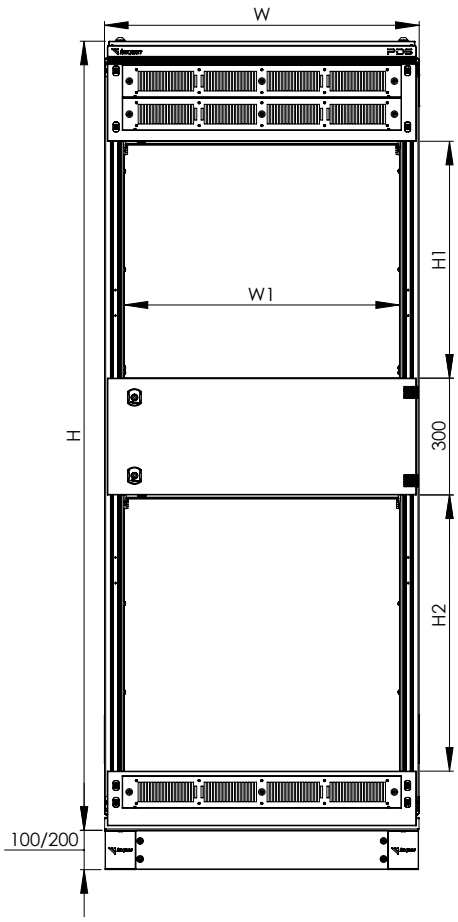

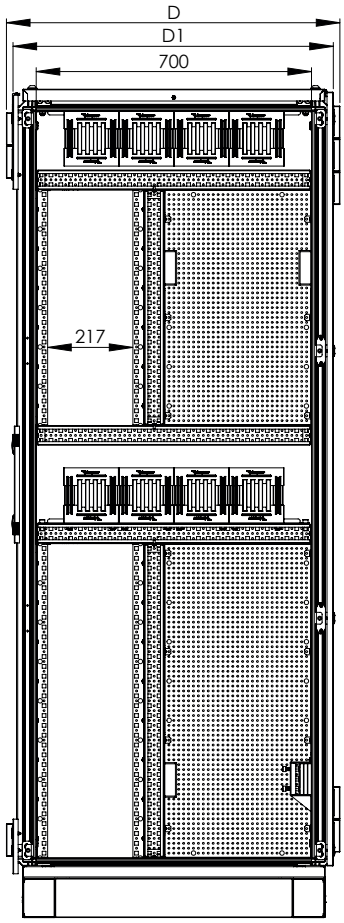

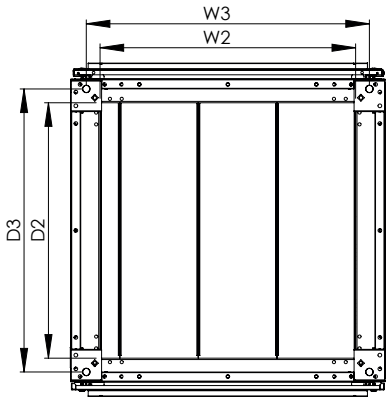

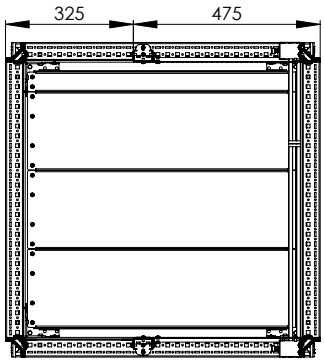

COUPLING (EXTERNAL))	WITH				HEIGHT			DEPTH			
	W(mm)	W1(mm)	W2(mm)	W3(mm)	H(mm)	H1(mm)	H2(mm)	D(mm)	D1(mm)	D2(mm)	D3(mm)
600Wx2000Hx800D	600	500	450	520	2007	600	700	848	815	650	720
800Wx2000Hx800D	800	700	650	720	2007	600	700	848	815	650	720

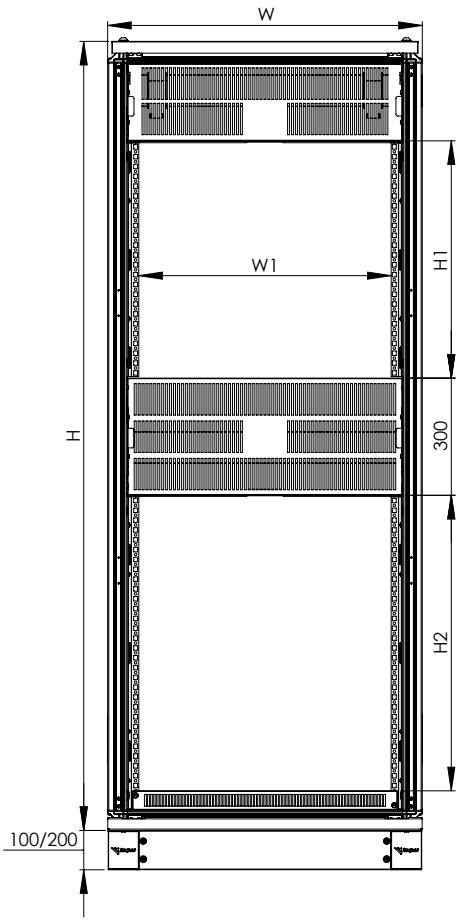

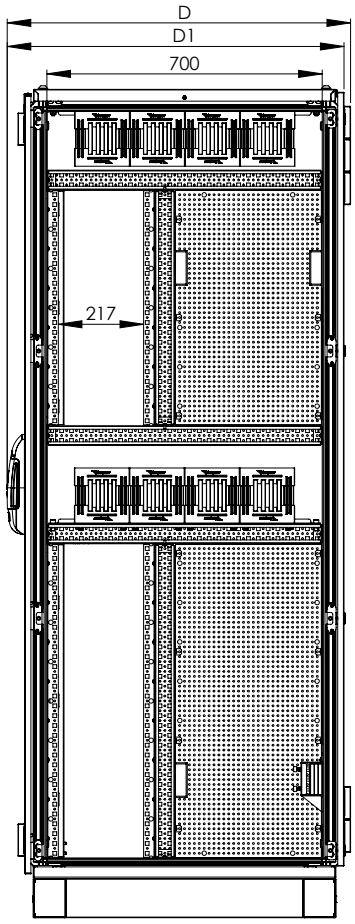

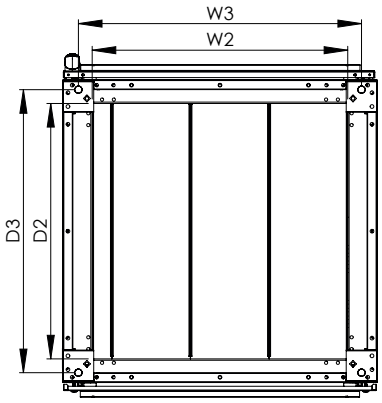

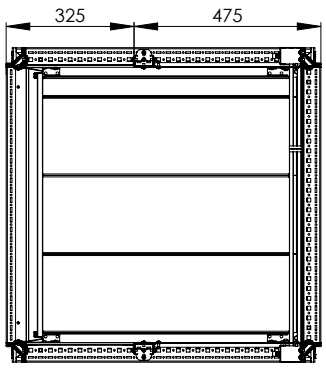

COUPLING (INTERNAL)	WITH				HEIGHT			DEPTH			
	W(mm)	W1(mm)	W2(mm)	W3(mm)	H(mm)	H1(mm)	H2(mm)	D(mm)	D1(mm)	D2(mm)	D3(mm)
600Wx2000Hx800D	600	442	450	520	2007	600	750	873	856	650	720
800Wx2000Hx800D	800	642	650	720	2007	600	750	873	856	650	720

1.4 CONVERT MODULE

1.4.1 CONVERT MODULE - 600 DEPTH

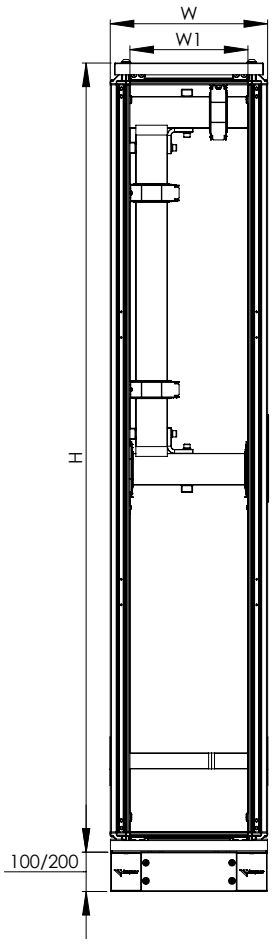

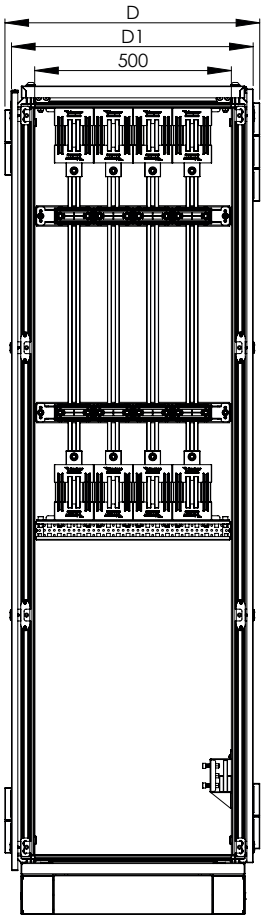

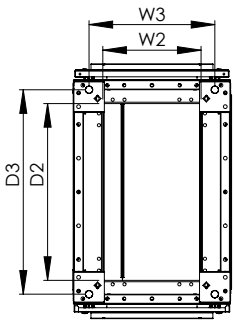

CONVERT	WITH				HEIGHT	DEPTH			
	W(mm)	W1(mm)	W2(mm)	W3(mm)	H(mm)	D(mm)	D1(mm)	D2(mm)	D3(mm)
400Wx2000Hx600D	400	300	250	320	2007	648	615	450	520

1.4.2 CONVERT MODULE - 800 DEPTH

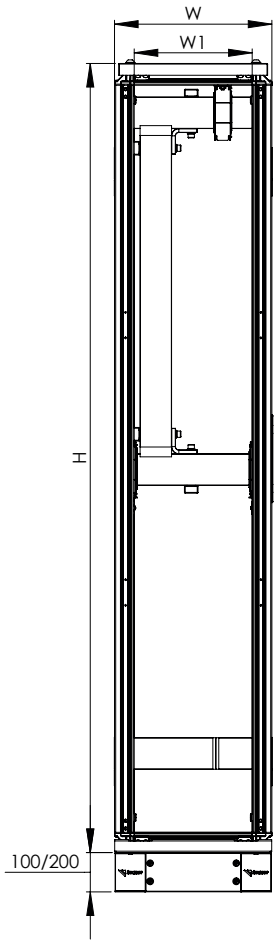

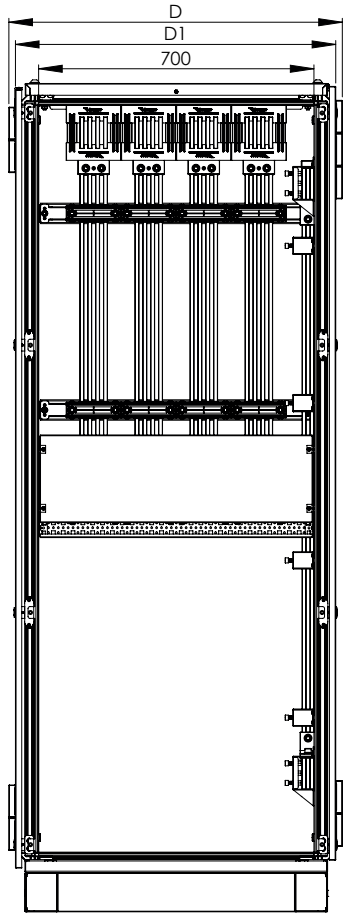

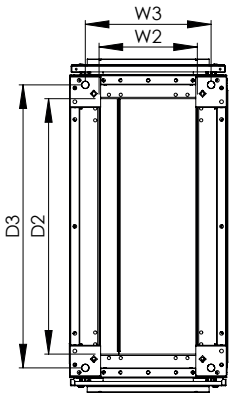

CONVERT	WITH				HEIGHT	DEPTH			
	W(mm)	W1(mm)	W2(mm)	W3(mm)	H(mm)	D(mm)	D1(mm)	D2(mm)	D3(mm)
400Wx2000Hx800D	400	300	250	320	2007	848	815	650	720

1.5 DISTRIBUTION MODULE

1.5.1 DISTRIBUTION MODULE - 600 DEPTH

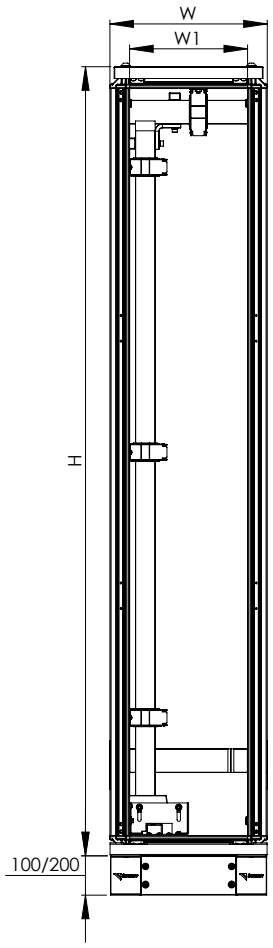

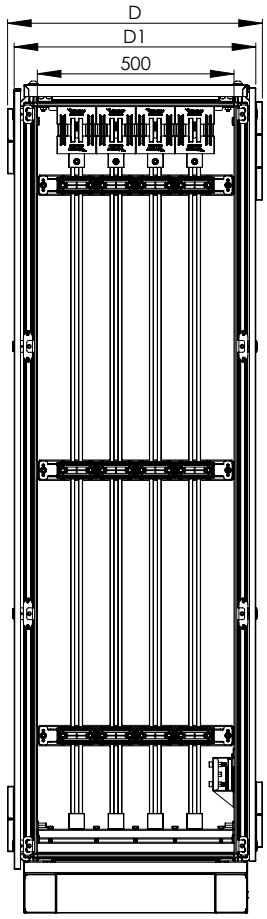

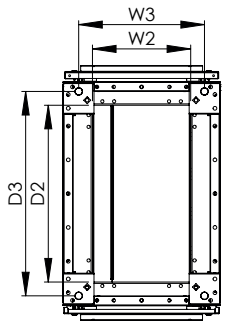

DISTRIBUTION	WITH				HEIGHT	DEPTH			
	W(mm)	W1(mm)	W2(mm)	W3(mm)	H(mm)	D(mm)	D1(mm)	D2(mm)	D3(mm)
300Wx2000Hx600D	300	200	150	220	2007	648	615	450	520
400Wx2000Hx600D	400	300	250	320	2007	648	615	450	520

1.5.2 DISTRIBUTION MODULE - 800 DEPTH

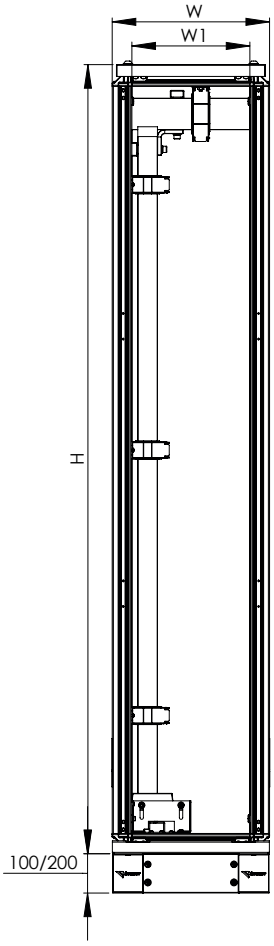

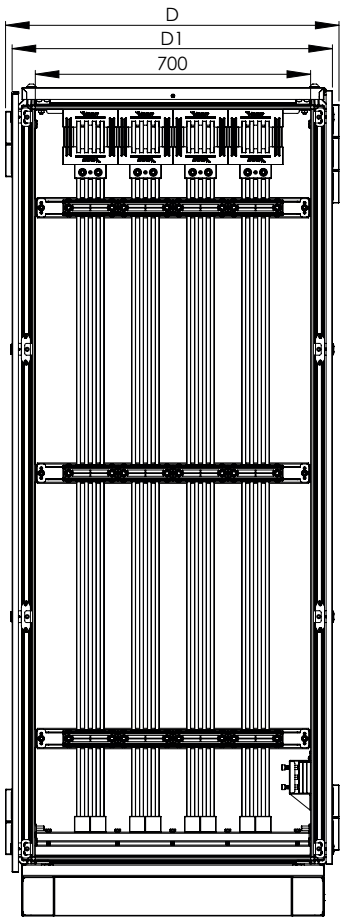

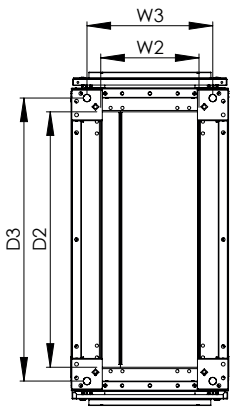

DISTRIBUTION	WITH				HEIGHT	DEPTH			
	W(mm)	W1(mm)	W2(mm)	W3(mm)	H(mm)	D(mm)	D1(mm)	D2(mm)	D3(mm)
300Wx2000Hx800D	300	200	150	220	2007	848	815	650	720
400Wx2000Hx800D	400	300	250	320	2007	848	815	650	720

1.6 FEEDER MODULE

1.6.1 FEEDER MODULE - 600 DEPTH

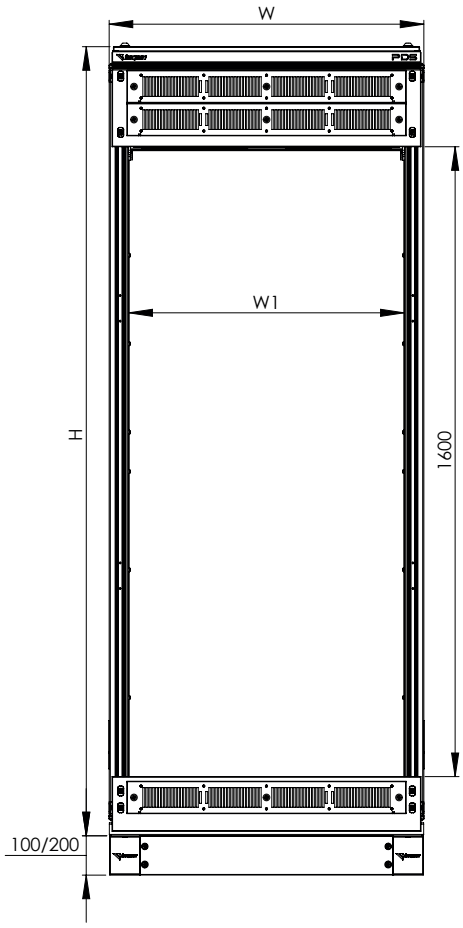

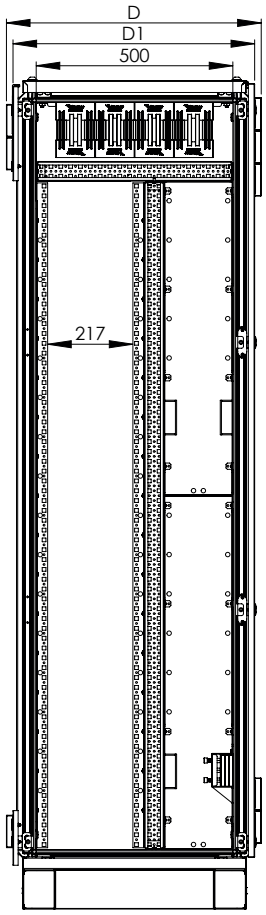

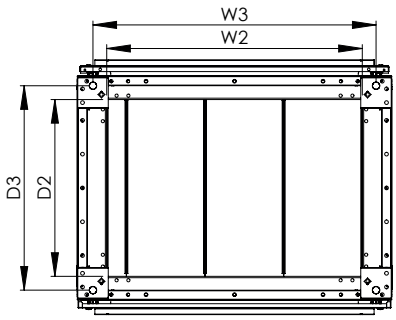

FEEDER (EXTERNAL)	WITH				HEIGHT	DEPTH			
	W(mm)	W1(mm)	W2(mm)	W3(mm)	H(mm)	D(mm)	D1(mm)	D2(mm)	D3(mm)
400Wx2000Hx600D	400	300	250	320	2007	648	615	450	520
600Wx2000Hx600D	600	500	450	520	2007	648	615	450	520
800Wx2000Hx600D	800	700	650	720	2007	648	615	450	520

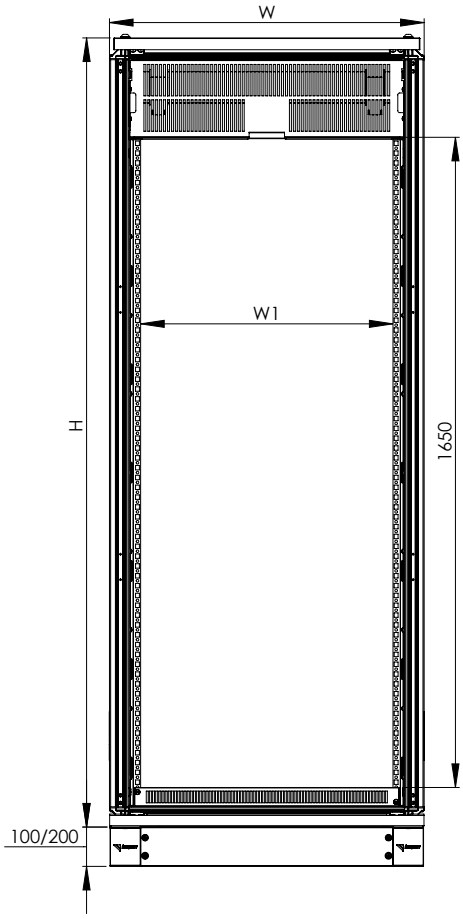

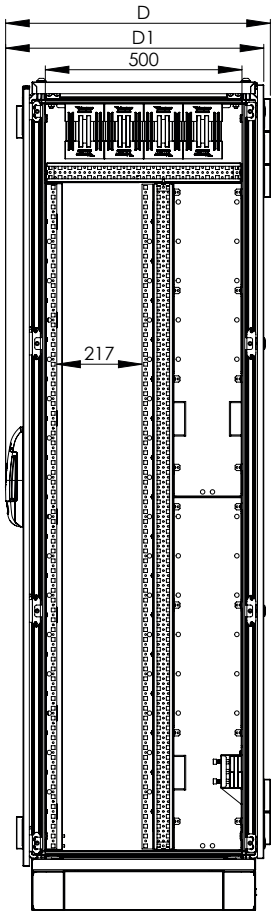

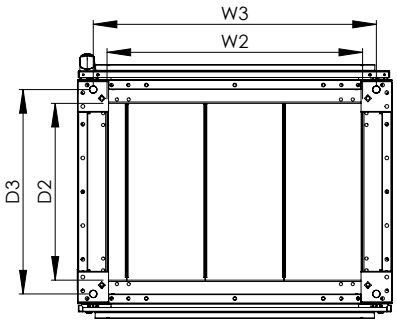

FEEDER (INTERNAL)	WITH				HEIGHT	DEPTH			
	W(mm)	W1(mm)	W2(mm)	W3(mm)	H(mm)	D(mm)	D1(mm)	D2(mm)	D3(mm)
400Wx2000Hx600D	400	242	250	320	2007	673	656	450	520
600Wx2000Hx600D	600	442	450	520	2007	673	656	450	520
800Wx2000Hx600D	800	642	650	720	2007	673	656	450	520

1.6.2 FEEDER MODULE - 800 DEPTH

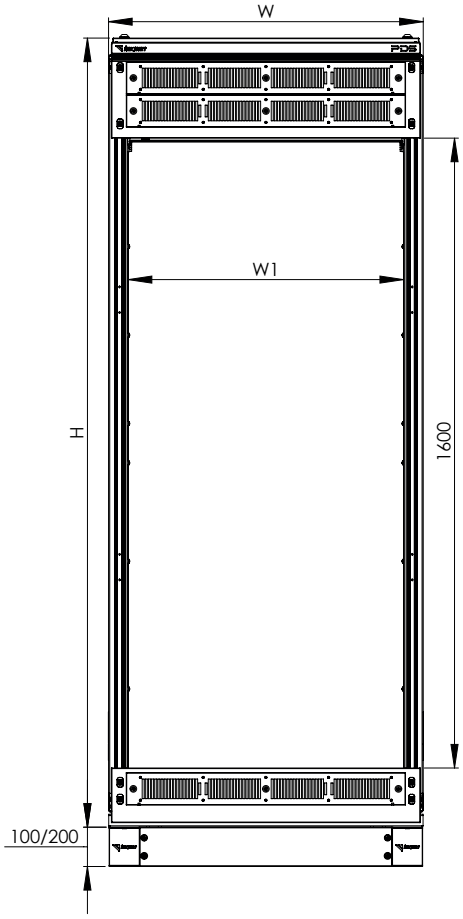

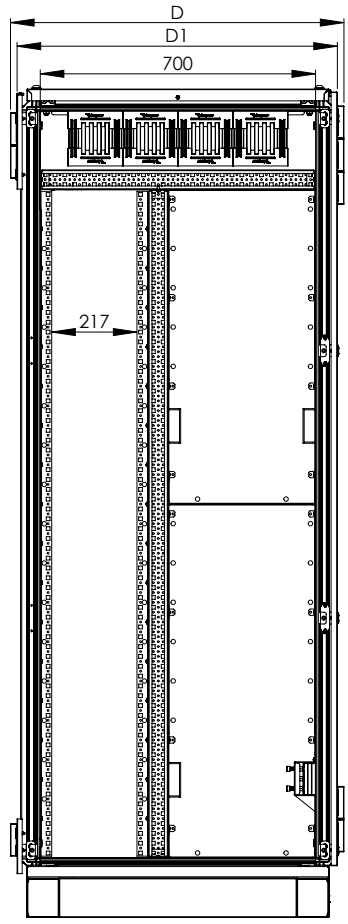

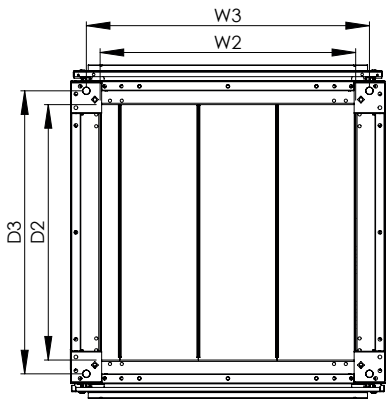

FEEDER (EXTERNAL)	WITH				HEIGHT	DEPTH			
	W(mm)	W1(mm)	W2(mm)	W3(mm)	H(mm)	D(mm)	D1(mm)	D2(mm)	D3(mm)
400Wx2000Hx800D	400	300	250	320	2007	848	815	650	720
600Wx2000Hx800D	600	500	450	520	2007	848	815	650	720
800Wx2000Hx800D	800	700	650	720	2007	848	815	650	720

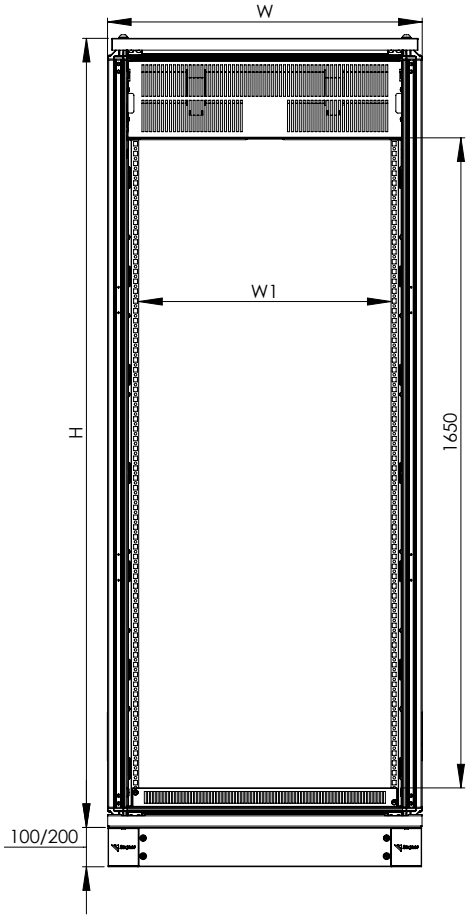

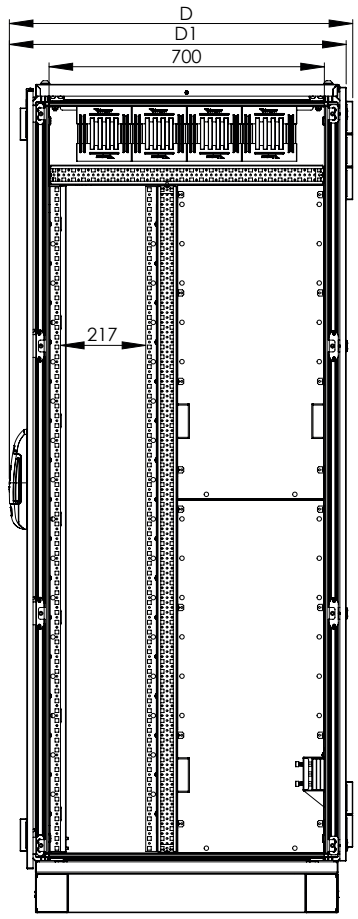

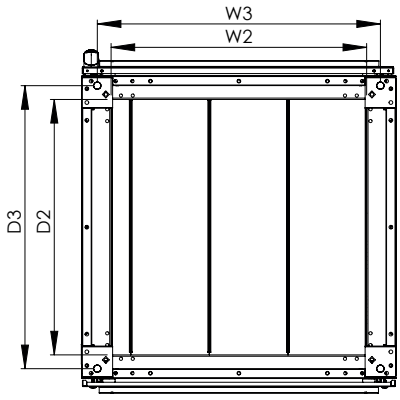

FEEDER (INTERNAL)	WITH				HEIGHT	DEPTH			
	W(mm)	W1(mm)	W2(mm)	W3(mm)	H(mm)	D(mm)	D1(mm)	D2(mm)	D3(mm)
400Wx2000Hx800D	400	242	250	320	2007	873	856	650	720
600Wx2000Hx800D	600	442	450	520	2007	873	856	650	720
800Wx2000Hx800D	800	642	650	720	2007	873	856	650	720

1.7 COMBINED FEEDER MODULE

1.7.1 COMBINED FEEDER MODULE - 600 DEPTH

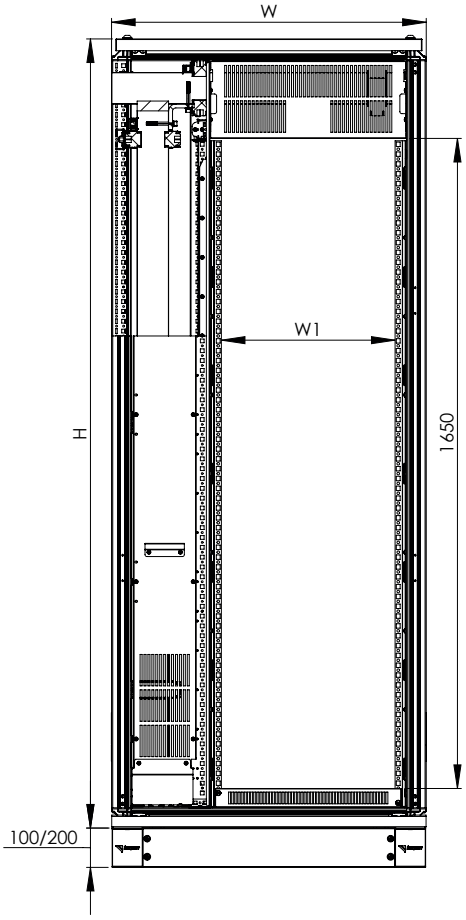

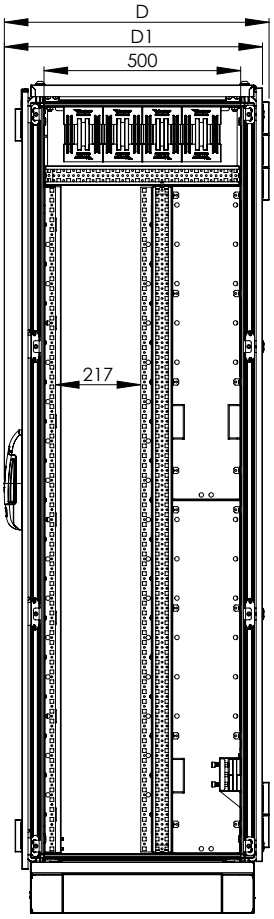

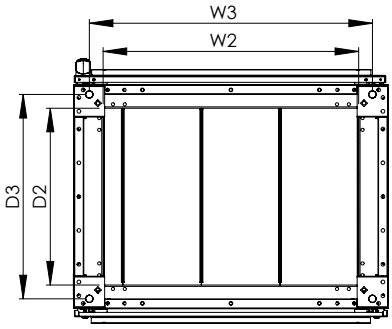

COMBINED FEEDER	WITH				HEIGHT	DEPTH			
	W(mm)	W1(mm)	W2(mm)	W3(mm)	H(mm)	D(mm)	D1(mm)	D2(mm)	D3(mm)
600Wx2000Hx600D	600	242	450	520	2007	673	656	450	520
800Wx2000Hx600D	800	442	650	720	2007	673	656	450	520

1.7.2 COMBINED FEEDER MODULE - 800 DEPTH

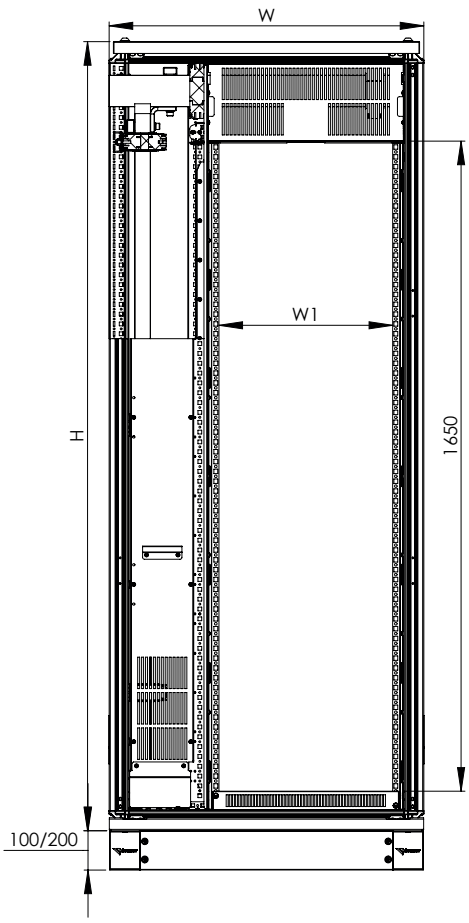

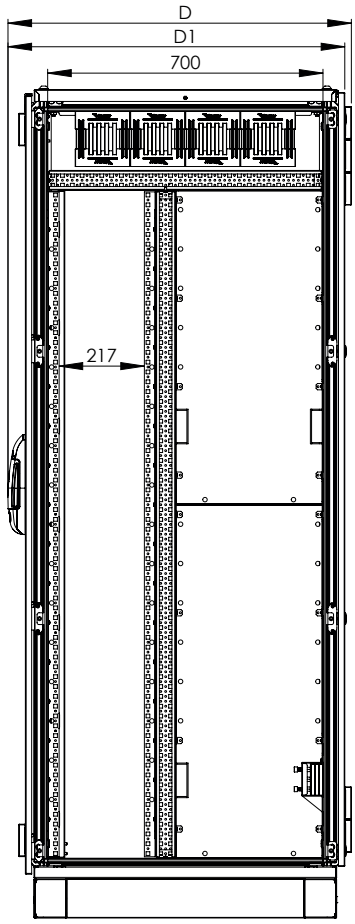

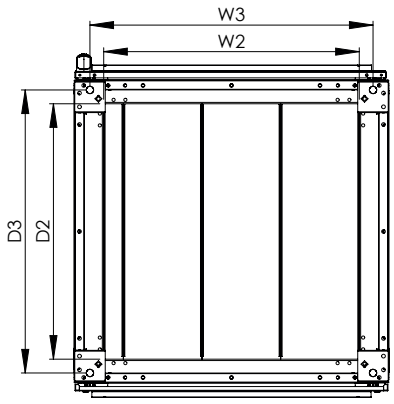

tekpan

COMBINED FEEDER	WITH				HEIGHT	DEPTH			
	W(mm)	W1(mm)	W2(mm)	W3(mm)	H(mm)	D(mm)	D1(mm)	D2(mm)	D3(mm)
600Wx2000Hx800D	600	242	450	520	2007	873	856	650	720
800Wx2000Hx800D	800	442	650	720	2007	873	856	650	720

1.8 MCC MODULE

1.8.1 MCC MODULE - 600 DEPTH

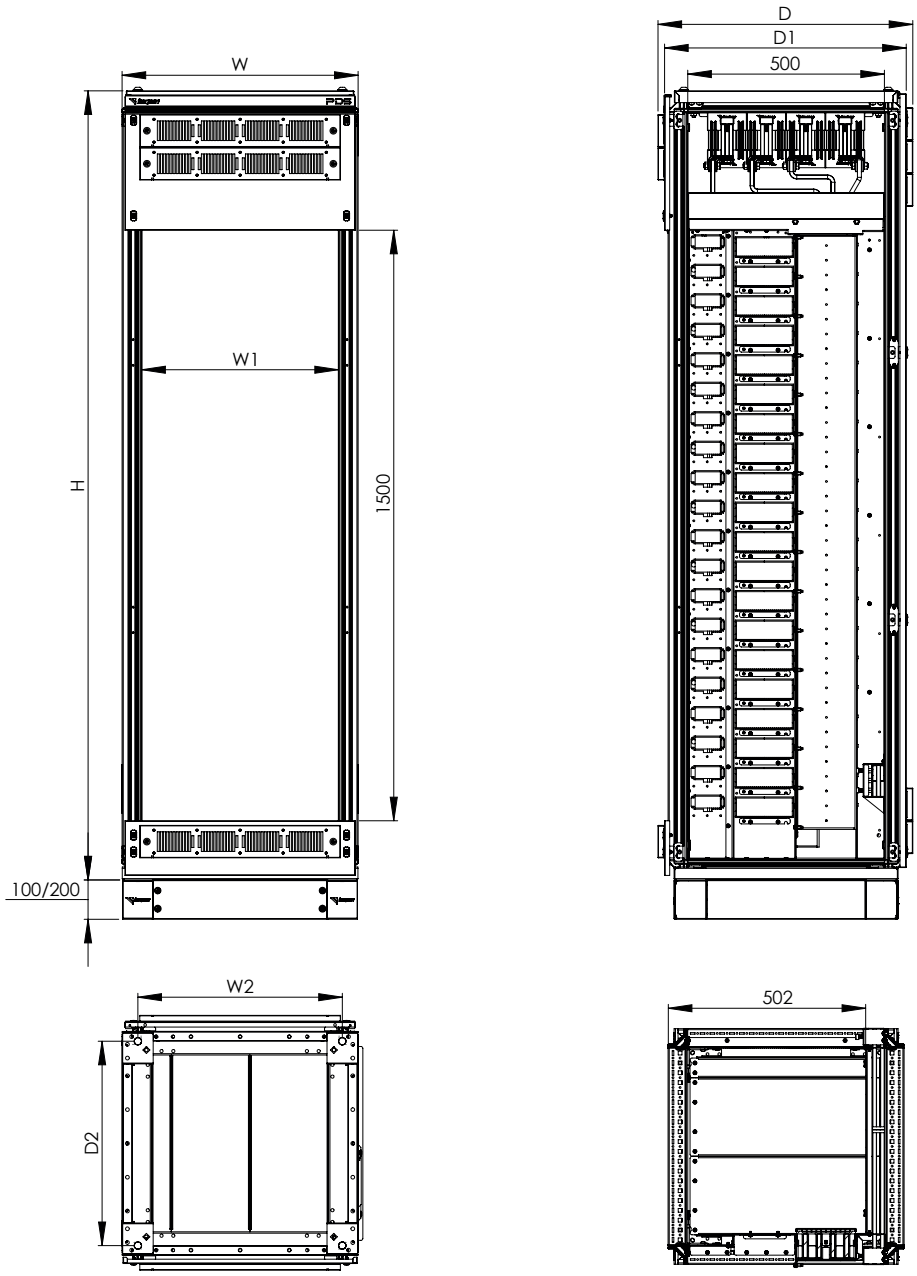

MCC	WITH			HEIGHT	HEIGHT		
	W(mm)	W1(mm)	W2(mm)	H(mm)	D(mm)	D1(mm)	D2(mm)
600Wx2000Hx600D	600	500	520	2007	648	615	520

1.8.2 MCC MODULE - 800 DEPTH

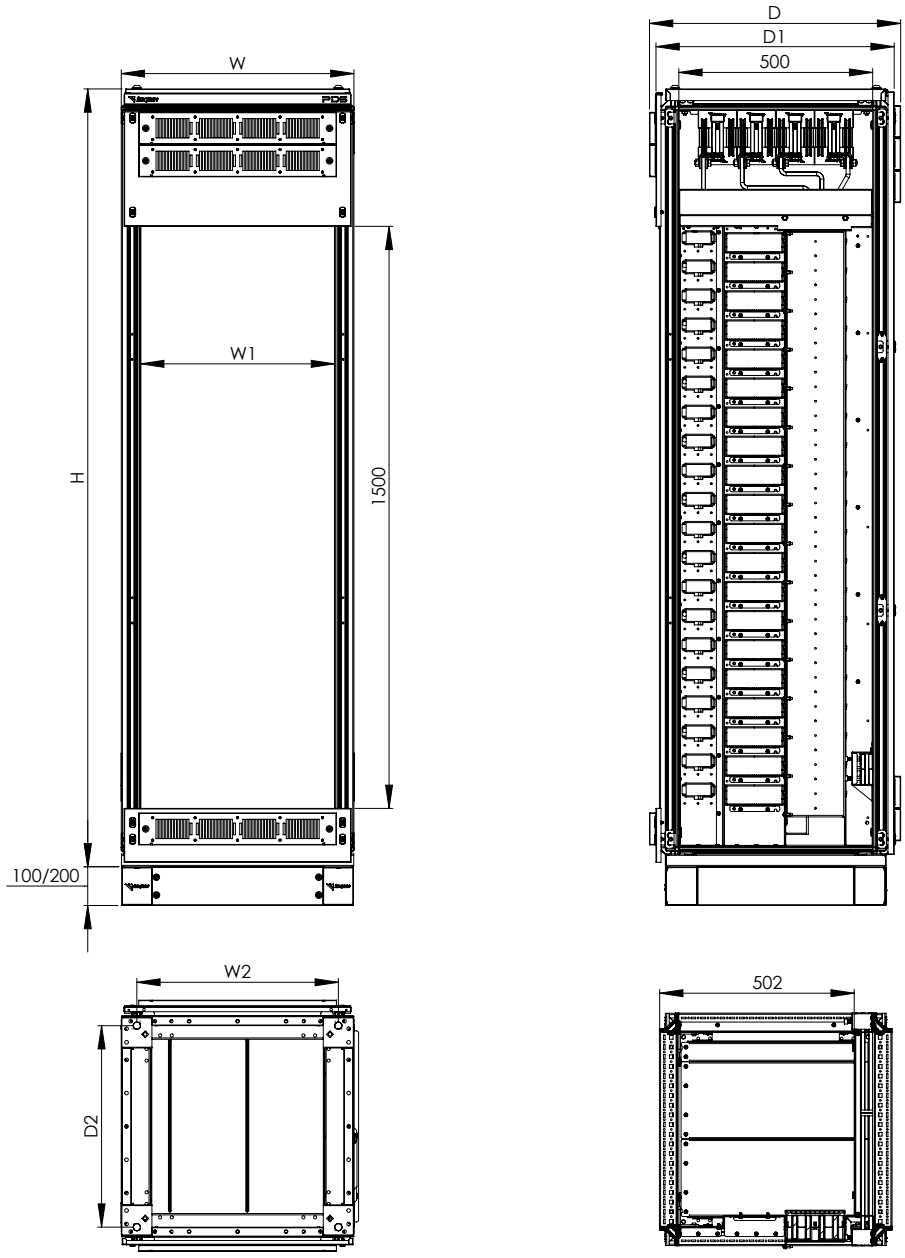

MCC	WITH			HEIGHT	HEIGHT		
	W(mm)	W1(mm)	W2(mm)	H(mm)	D(mm)	D1(mm)	D2(mm)
600Wx2000Hx800D	600	500	520	2007	848	815	720

1.9 CABLING MODULE

1.9.1 CABLING MODULE - 600 DEPTH

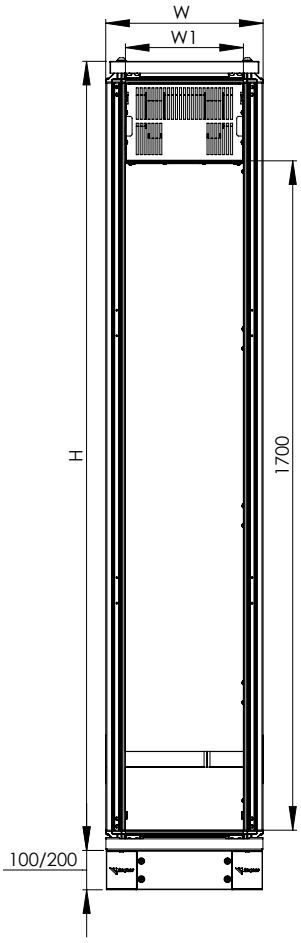

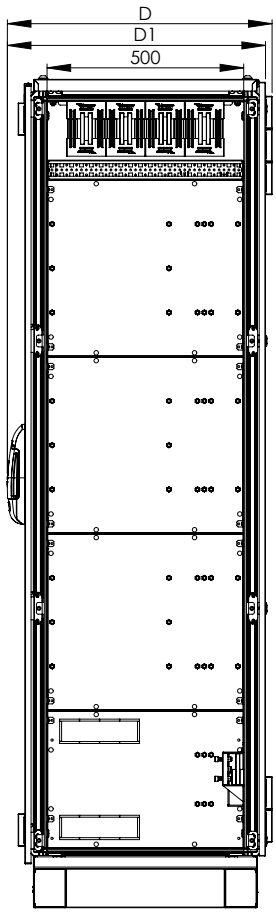

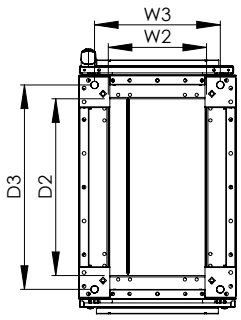

CABLING	WITH				HEIGHT	DEPTH			
	W(mm)	W1(mm)	W2(mm)	W3(mm)	H(mm)	D(mm)	D1(mm)	D2(mm)	D3(mm)
400Wx2000Hx600D	400	300	250	320	2007	673	656	450	520
600Wx2000Hx600D	600	500	450	520	2007	673	656	450	520

1.9.2 CABLING MODULE - 800 DEPTH

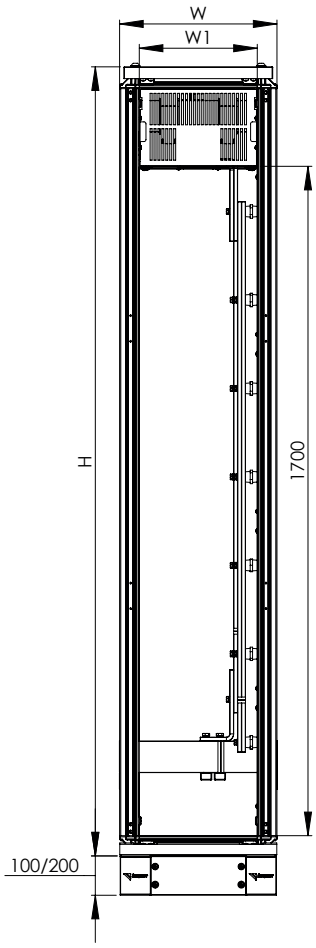

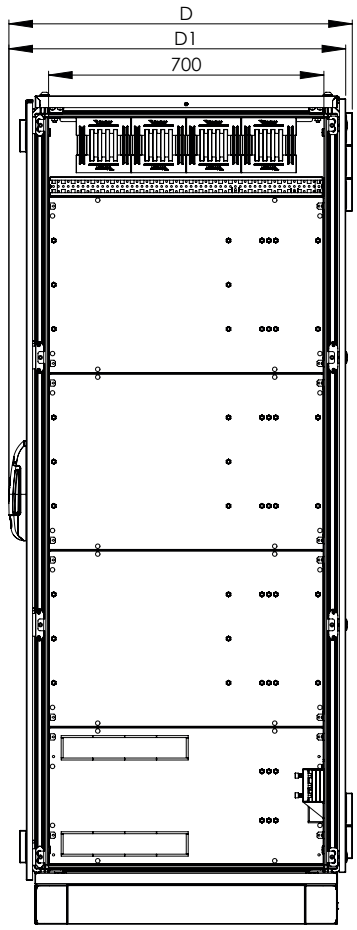

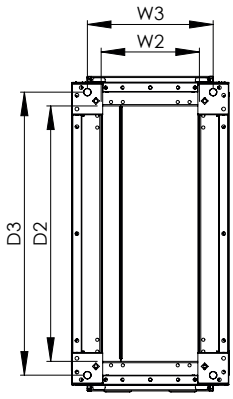

CABLING	WITH				HEIGHT	DEPTH			
	W(mm)	W1(mm)	W2(mm)	W3(mm)	H(mm)	D(mm)	D1(mm)	D2(mm)	D3(mm)
400Wx2000Hx800D	400	300	250	320	2007	873	856	650	720
600Wx2000Hx800D	600	500	450	520	2007	873	856	650	720

1.9.3 CABLING MODULE (REAR PANEL) - 600 DEPTH

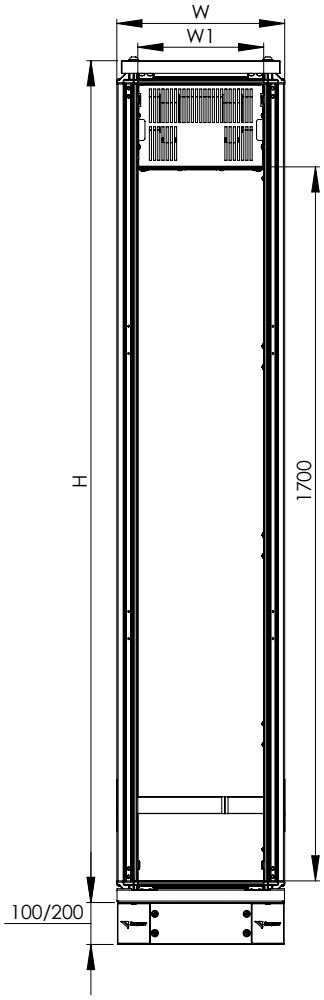

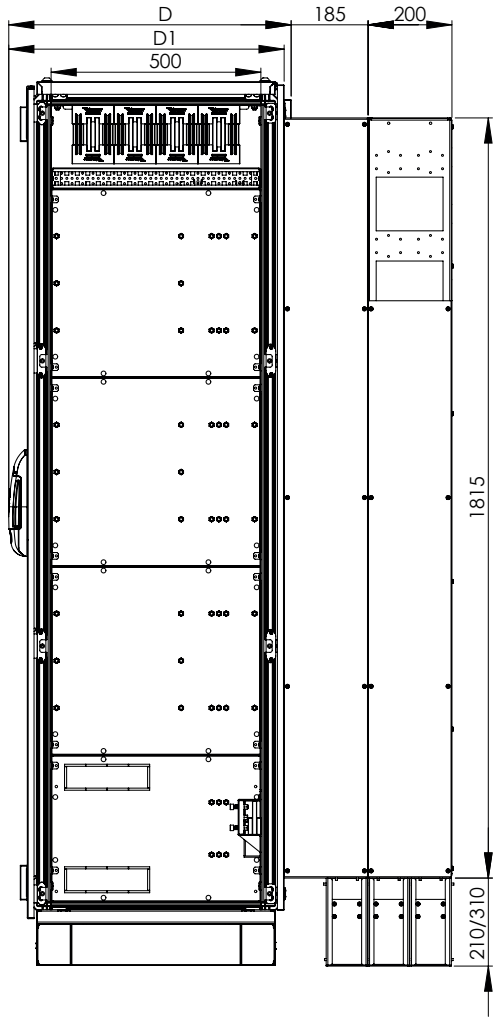

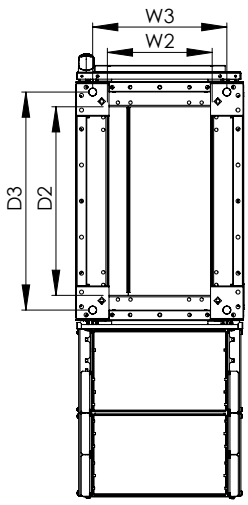

CABLING	WITH				HEIGHT	DEPTH			
	W(mm)	W1(mm)	W2(mm)	W3(mm)	H(mm)	D(mm)	D1(mm)	D2(mm)	D3(mm)
400Wx2000Hx600D	400	300	250	320	2007	673	656	450	520
600Wx2000Hx600D	600	500	450	520	2007	673	656	450	520

1.9.4 CABLING MODULE (REAR PANEL) - 800 DEPTH

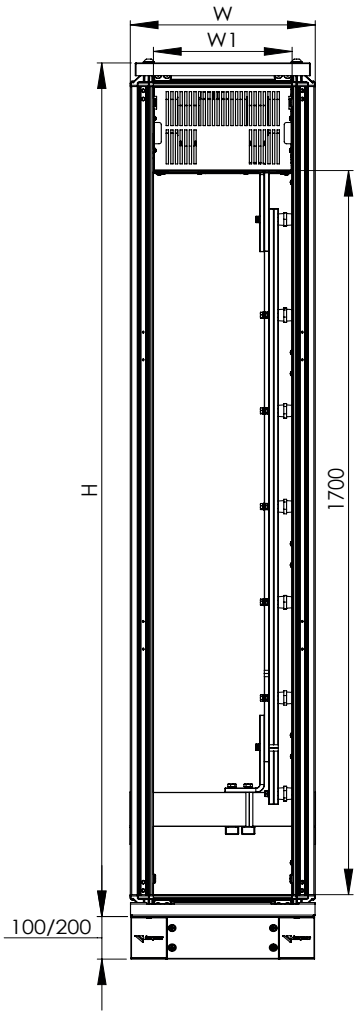

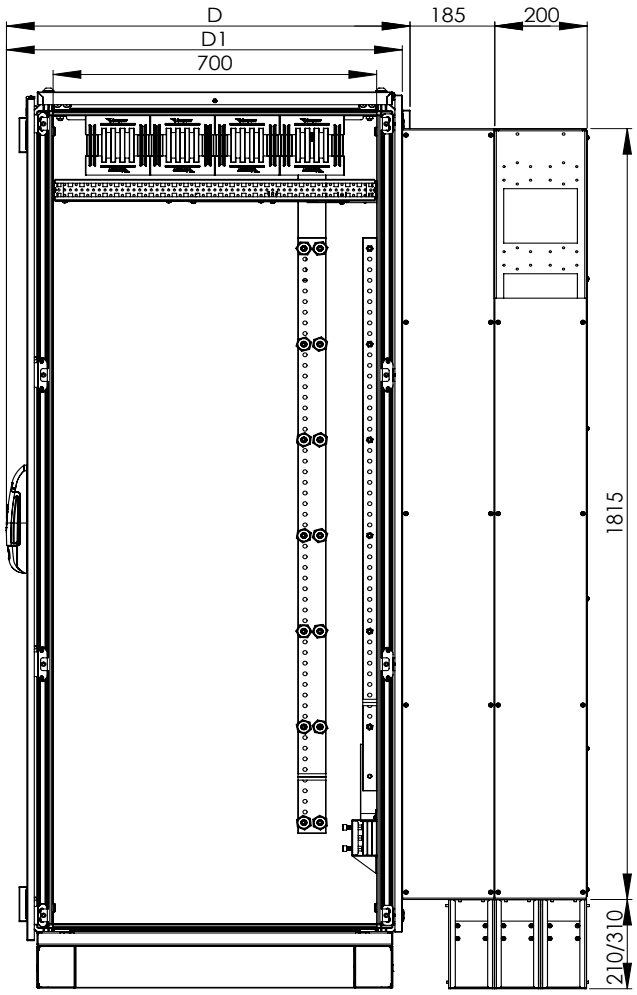

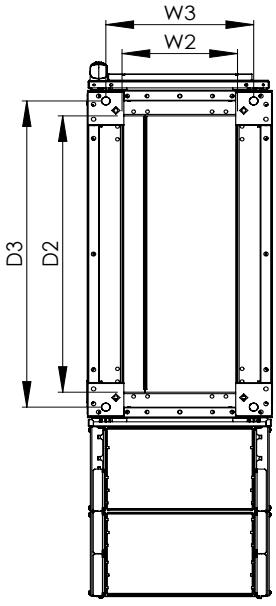

CABLING	WITH				HEIGHT	DEPTH			
	W(mm)	W1(mm)	W2(mm)	W3(mm)	H(mm)	D(mm)	D1(mm)	D2(mm)	D3(mm)
400Wx2000Hx800D	400	300	250	320	2007	873	856	650	720
600Wx2000Hx800D	600	500	450	520	2007	873	856	650	720

2. CASSETTES DIMENSIONS

2.1 ACB CASSETTES

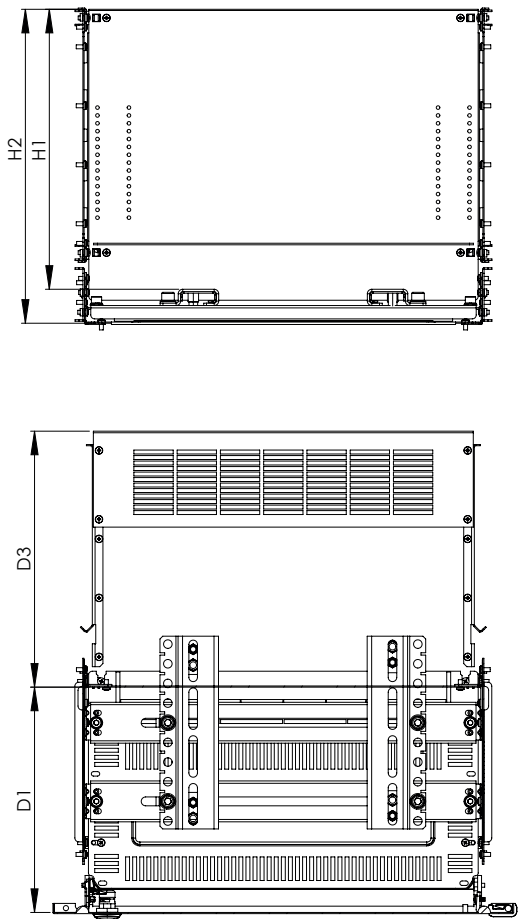

EXTERNAL

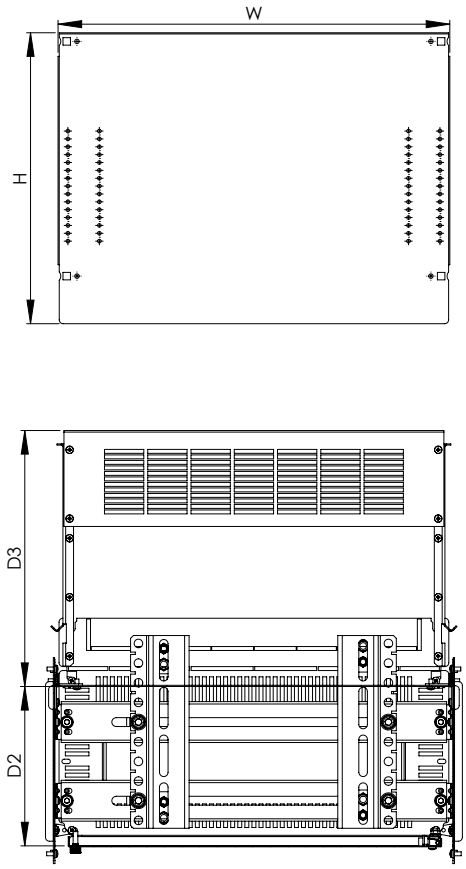

INTERNAL

ACB	WITH	HEIGHT			DEPTH		
	W(mm)	H(mm)	H1(mm)	H2(mm)	D1(mm)	D2(mm)	D3(mm)
600Wx400Hx600D	498	370	356	400	287	203	325
600Wx400Hx800D	498	370	356	400	287	203	525
800Wx500Hx600D	698	470	456	500	287	203	325
800Wx500Hx800D	698	470	456	500	287	203	525
800Wx600Hx600D	698	570	556	600	287	203	325
800Wx600Hx800D	698	570	556	600	287	203	525

2.2 MCCB (EASY-FIX) CASSETTES

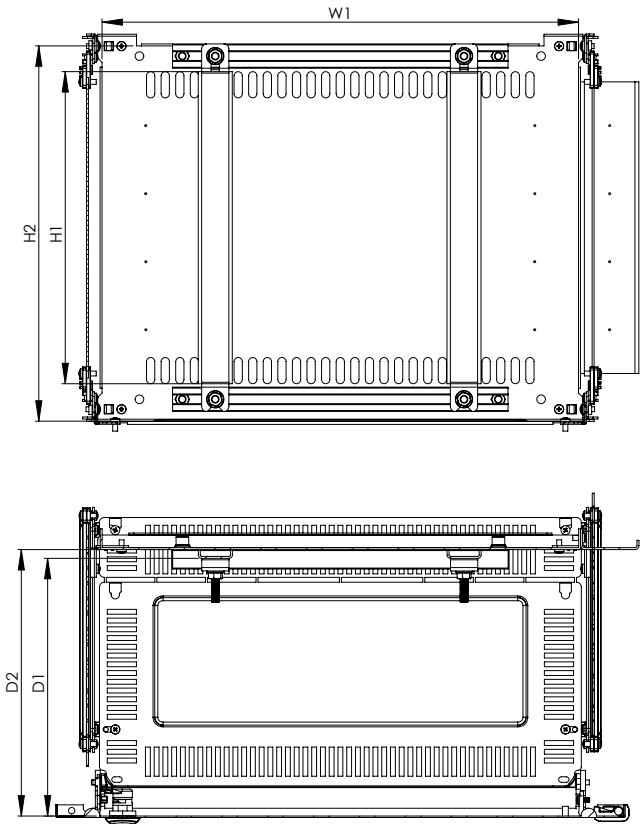

EXTERNAL

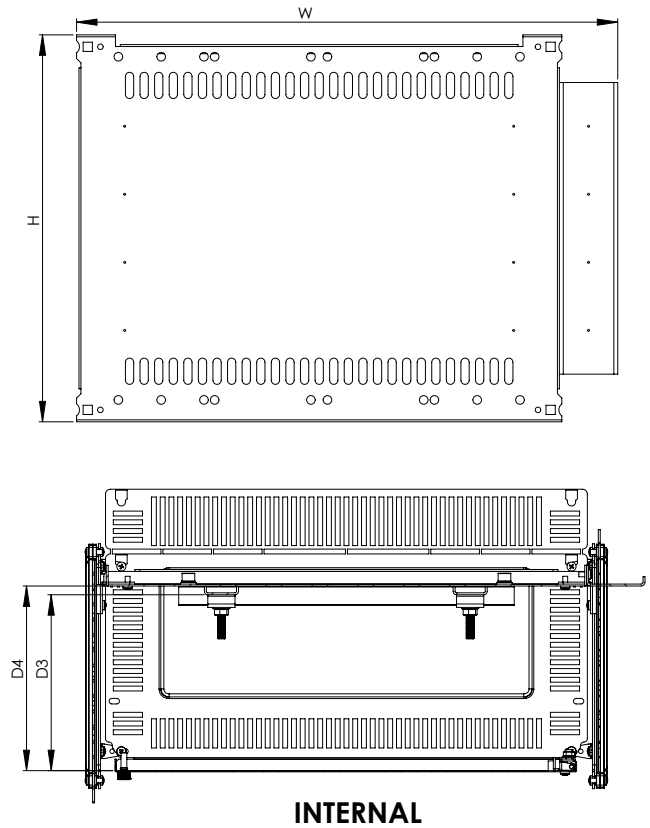

INTERNAL

EASY FIX	WITH		HEIGHT			DEPTH			
	W(mm)	W1(mm)	H(mm)	H1(mm)	H2(mm)	D1(mm)	D2(mm)	D3(mm)	D4(mm)
400Wx200H	357	290	198	121	186	265	274	181	190
400Wx250H	357	290	248	171	236	265	274	181	190
600Wx200H	557	490	198	121	186	265	274	181	190
600Wx250H	557	490	248	171	236	265	274	181	190
600Wx300H	557	490	298	221	286	265	274	181	190
600Wx350H	557	490	348	271	336	265	274	181	190
600Wx400H	557	490	398	321	386	265	274	181	190
800Wx200H	757	690	198	121	186	265	274	181	190
800Wx250H	757	690	248	171	236	265	274	181	190
800Wx300H	757	690	298	221	286	265	274	181	190
800Wx350H	757	690	348	271	336	265	274	181	190
800Wx400H	757	690	398	321	386	265	274	181	190

2.3 MCCB (EMPTY) CASSETTES

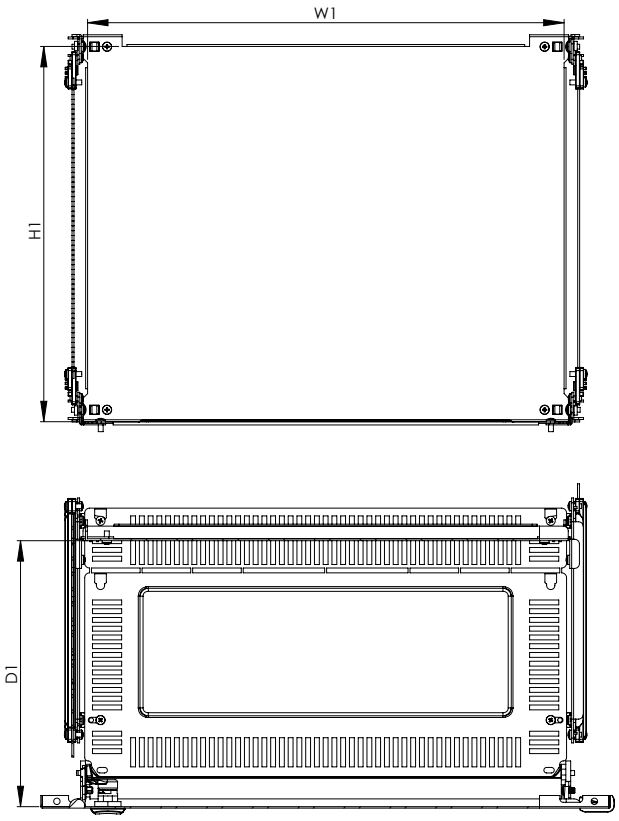

EXTERNAL

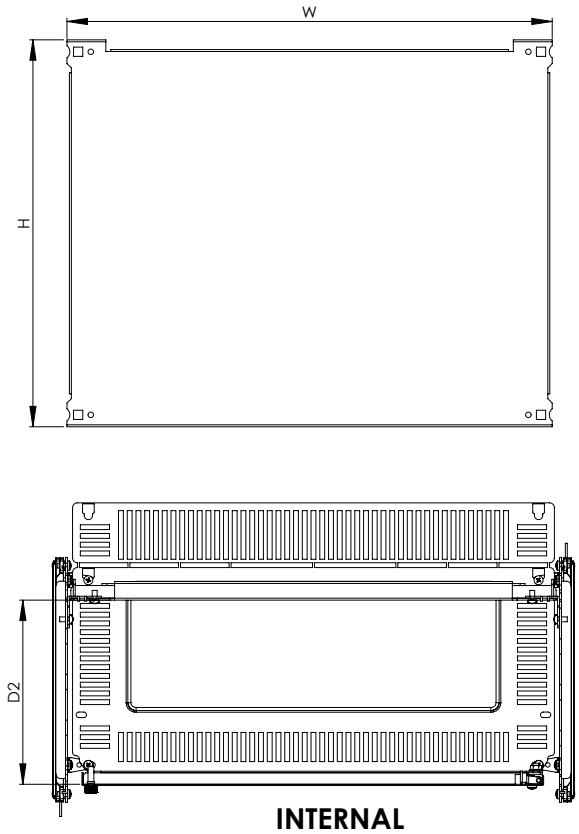

INTERNAL

EMPTY	WITH		HEIGHT		DEPTH	
	W(mm)	W1(mm)	H(mm)	H1(mm)	D1(mm)	D2(mm)
400Wx150H	299	290	148	136	274	190
400Wx200H	299	290	198	186	274	190
400Wx250H	299	290	248	236	274	190
400Wx300H	299	290	298	286	274	190
400Wx350H	299	290	348	336	274	190
400Wx400H	299	290	398	386	274	190
400Wx450H	299	290	448	436	274	190
400Wx500H	299	290	498	486	274	190
400Wx600H	299	290	548	536	274	190

EMPTY	WITH		HEIGHT		DEPTH	
	W(mm)	W1(mm)	H(mm)	H1(mm)	D1(mm)	D2(mm)
600Wx150H	499	490	148	136	274	190
600Wx200H	499	490	198	186	274	190
600Wx250H	499	490	248	236	274	190
600Wx300H	499	490	298	286	274	190
600Wx350H	499	490	348	336	274	190
600Wx400H	499	490	398	386	274	190
600Wx450H	499	490	448	436	274	190
600Wx500H	499	490	498	486	274	190
600Wx600H	499	490	548	536	274	190

EMPTY	WITH		HEIGHT		DEPTH	
	W(mm)	W1(mm)	H(mm)	H1(mm)	D1(mm)	D2(mm)
800Wx150H	699	690	148	136	274	190
800Wx200H	699	690	198	186	274	190
800Wx250H	699	690	248	236	274	190
800Wx300H	699	690	298	286	274	190
800Wx350H	699	690	348	336	274	190
800Wx400H	699	690	398	386	274	190
800Wx450H	699	690	448	436	274	190
800Wx500H	699	690	498	486	274	190
800Wx600H	699	690	548	536	274	190

2.4 MCB CASSETTES

2.4.1 MCB CASSETTES - 200 HEIGHT

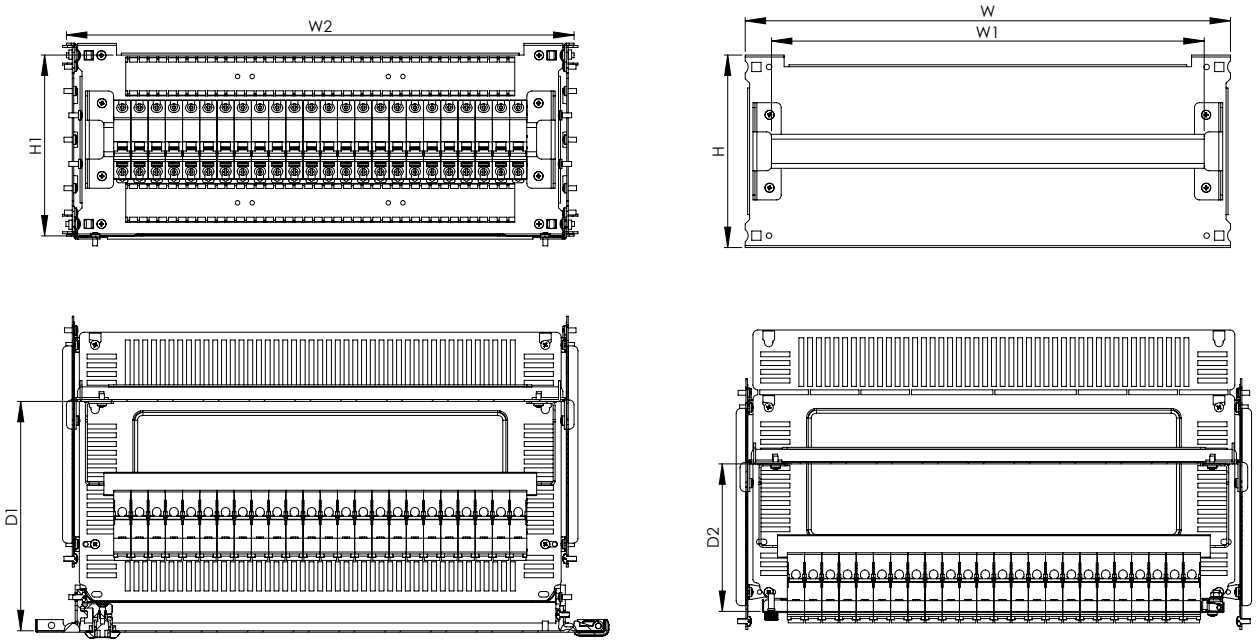

EXTERNAL **INTERNAL**

MCB	WITH			HEIGHT		DEPTH	
	W(mm)	W1(mm)	W2(mm)	H(mm)	H1(mm)	D1(mm)	D2(mm)
400Wx200H	299	245	322	198	186	236	152
600Wx200H	499	445	522	198	186	236	152
800Wx200H	699	645	722	198	186	236	152

2.4.2 MCB CASSETTES - 300 HEIGHT

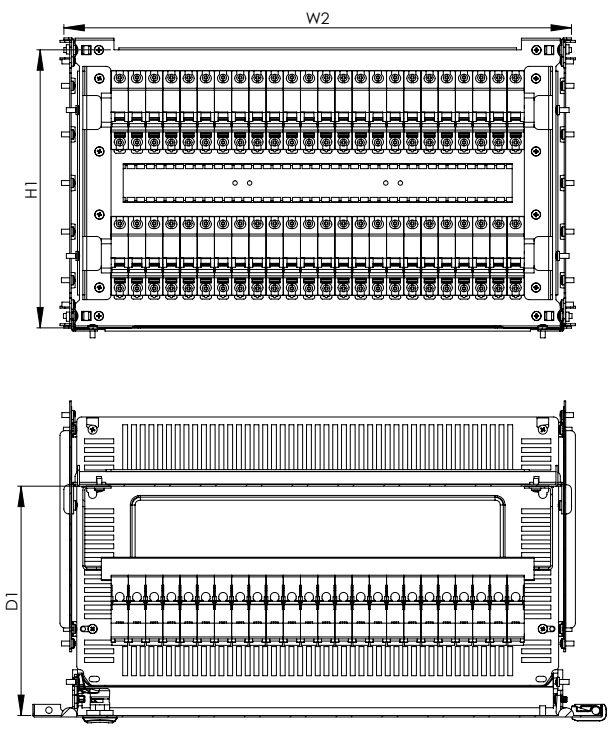

EXTERNAL

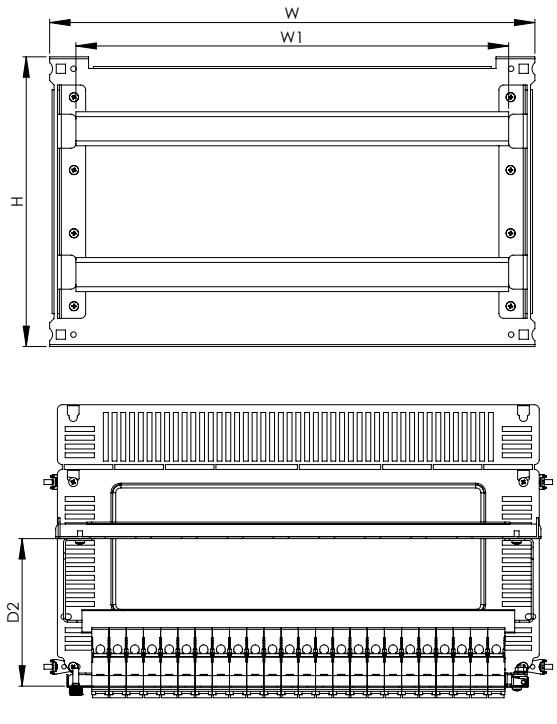

INTERNAL

MCB	WITH			HEIGHT		DEPTH	
	W(mm)	W1(mm)	W2(mm)	H(mm)	H1(mm)	D1(mm)	D2(mm)
400Wx300H	299	245	322	298	286	236	152
600Wx300H	499	445	522	298	286	236	152
800Wx300H	699	645	722	298	286	236	152

2.5 MCC DRAWABLE CASSETTES

2.5.1 MCC DRAWABLE CASSETTES - 75H DOL

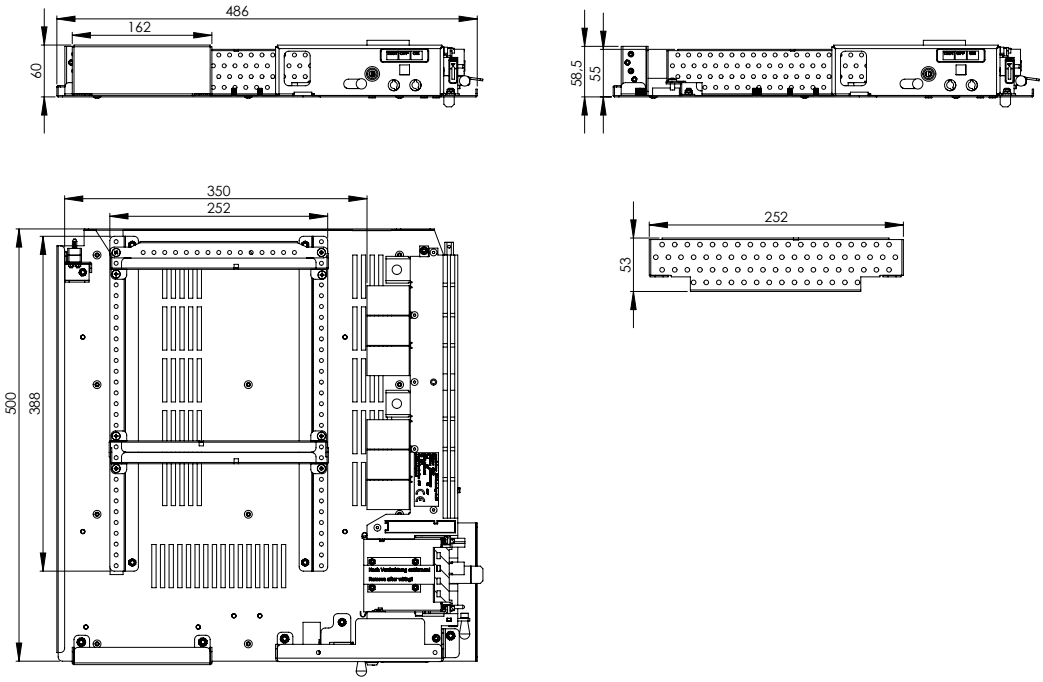

2.5.2 MCC DRAWABLE CASSETTES - 150H DOL

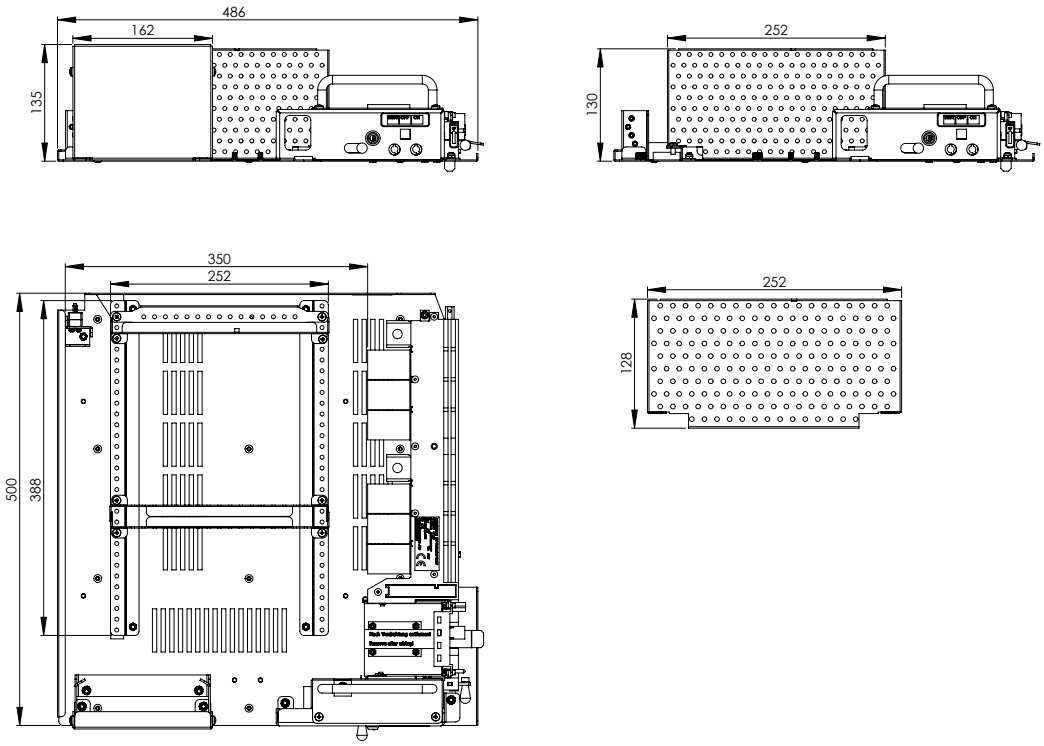

2.5.3 MCC DRAWABLE CASSETTES - 225H DOL

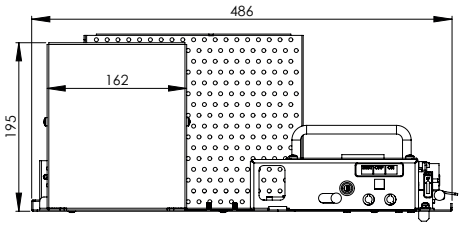

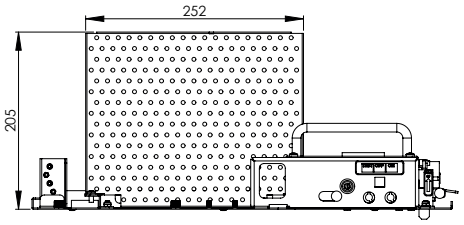

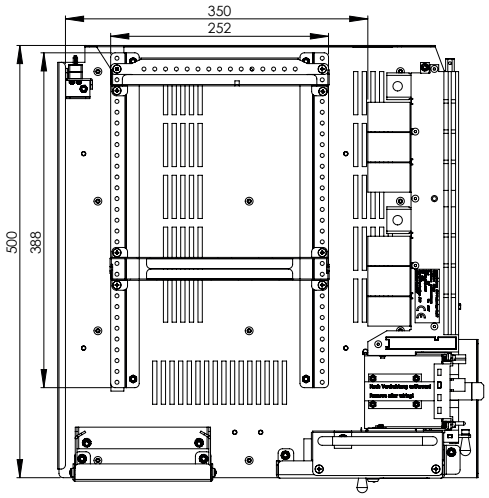

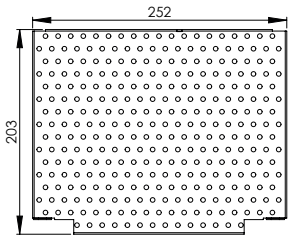

2.5.4 MCC DRAWABLE CASSETTES - 150H DSD

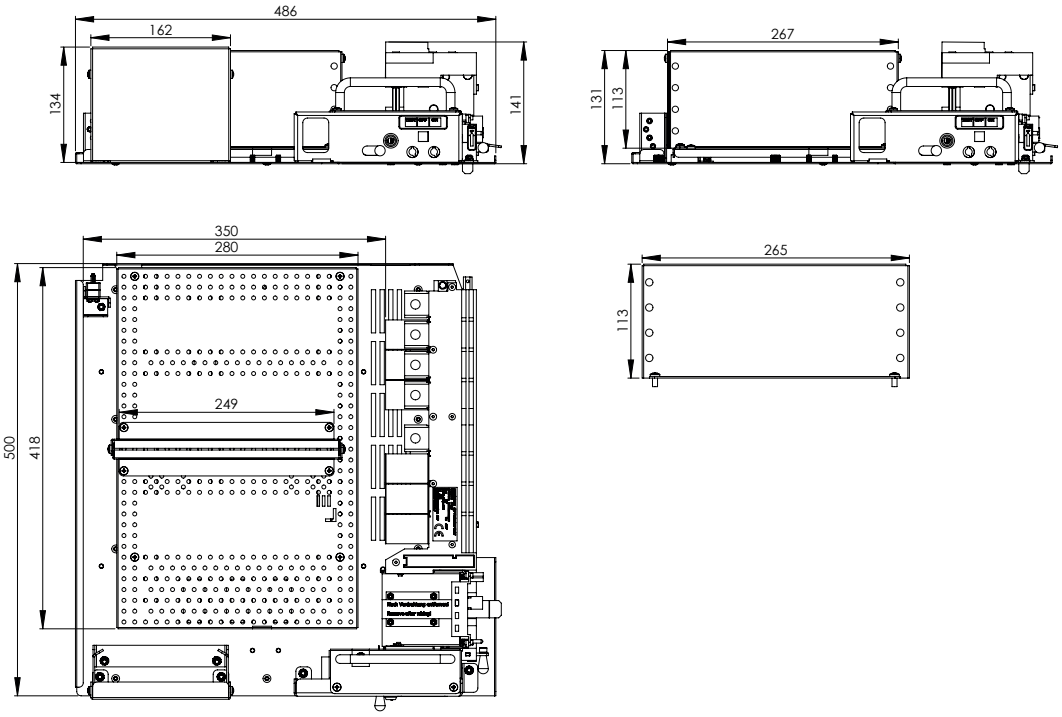

2.5.5 MCC DRAWABLE CASSETTES - 225H DSD

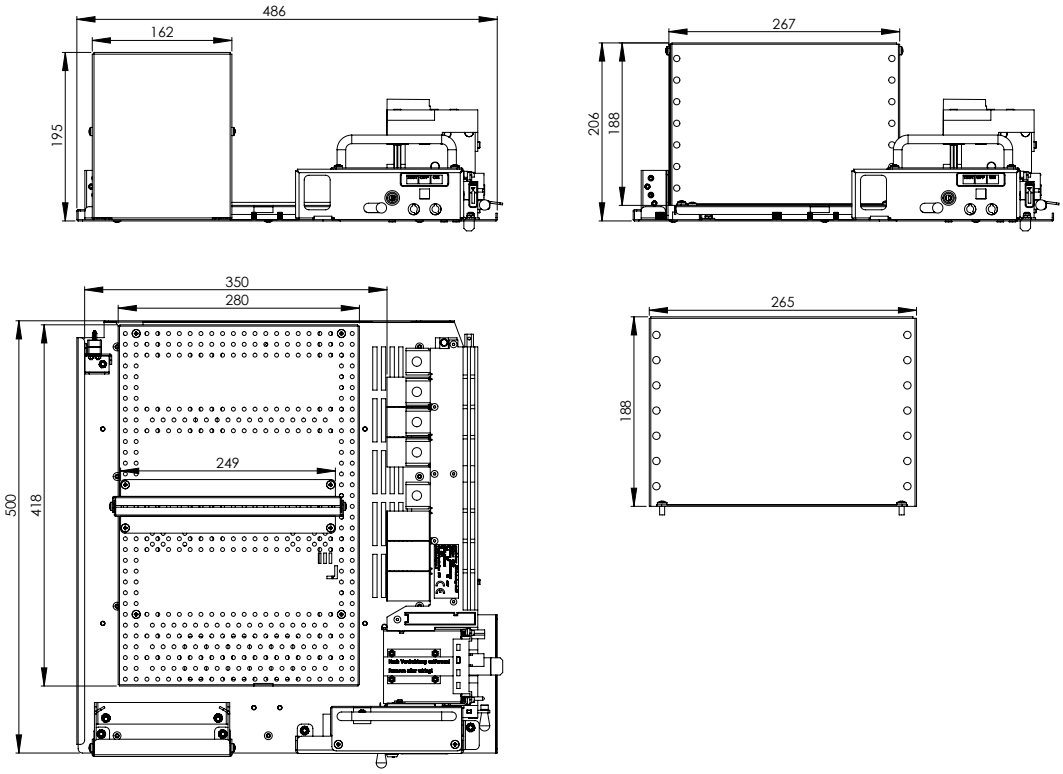

2.5.6 MCC DRAWABLE CASSETTES - 300H DSD

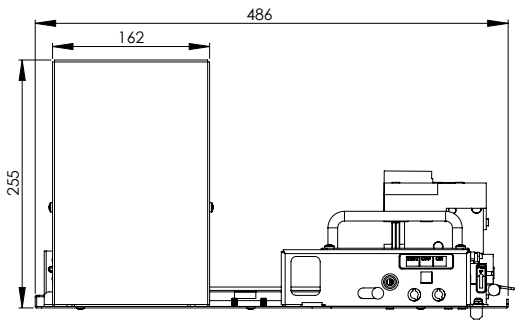

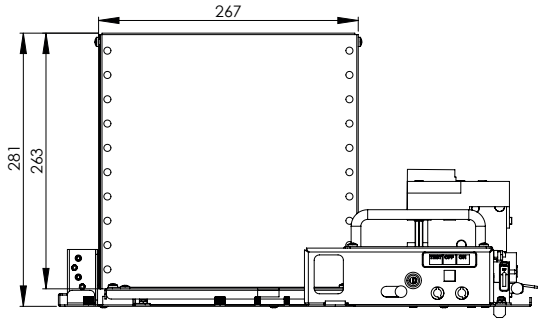

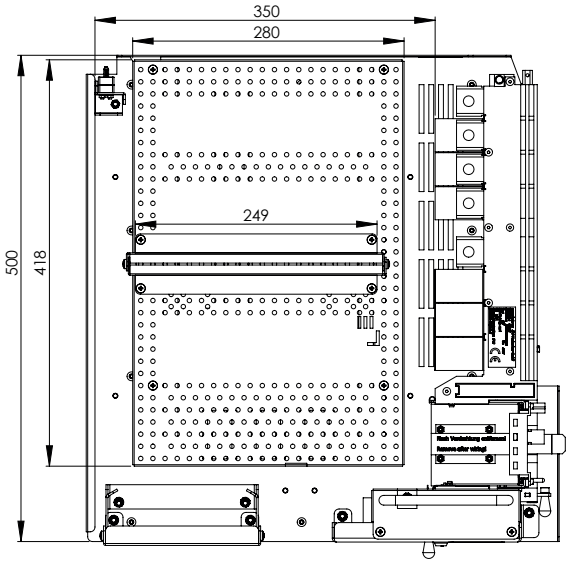

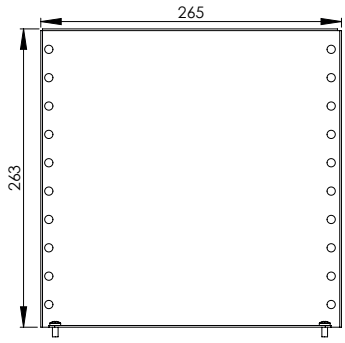

2.5.7 MCC DRAWABLE CASSETTES - 150H PD (125A)

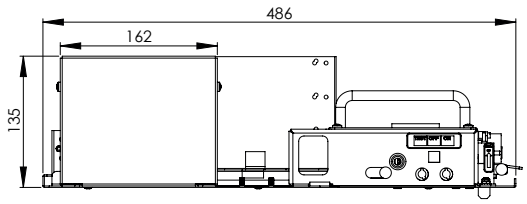

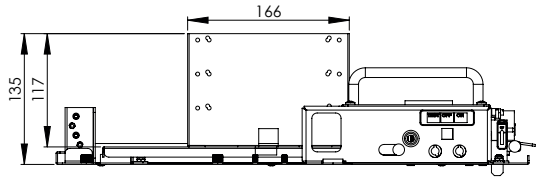

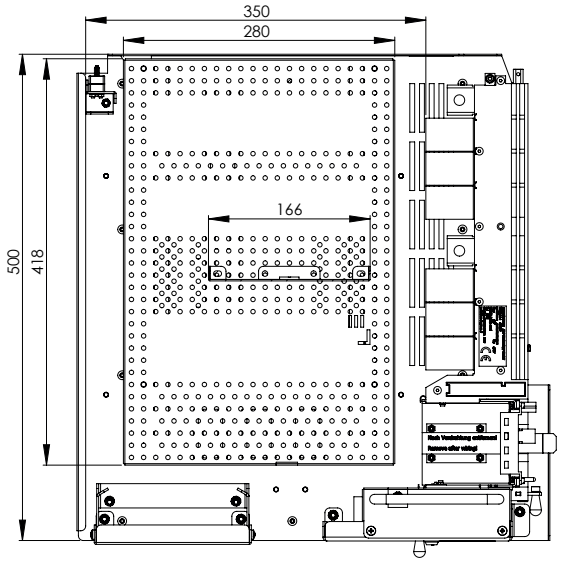

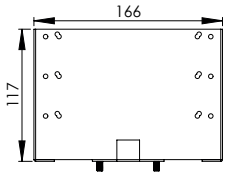

2.5.8 MCC DRAWABLE CASSETTES - 225H PD (125A-315A)

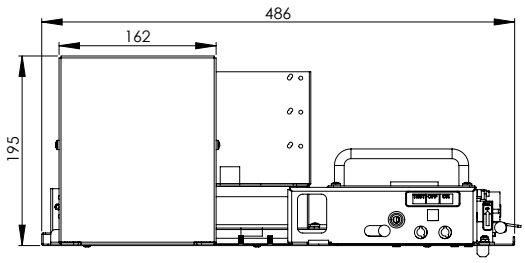

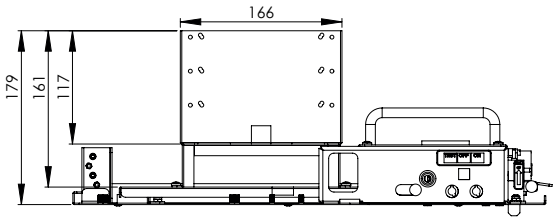

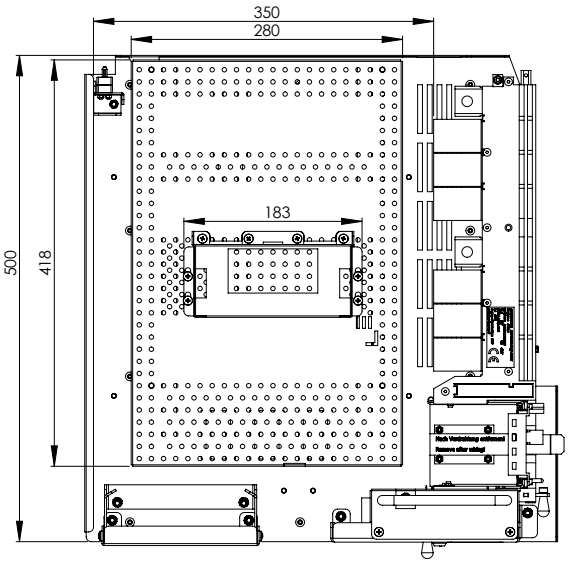

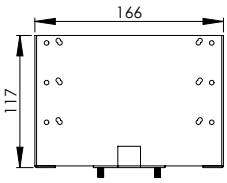

2.5.9 MCC DRAWABLE CASSETTES - 225H PD (630A)

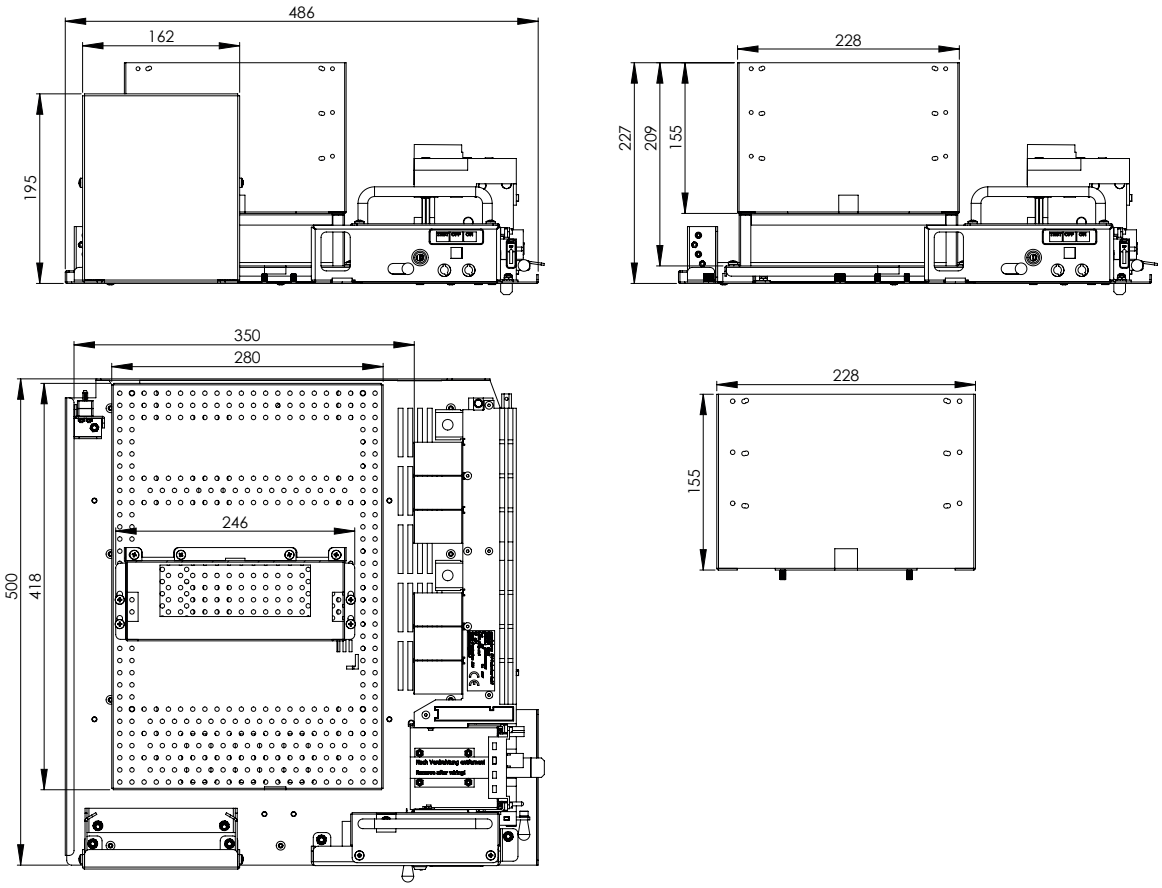

2.5.10 MCC DRAWABLE CASSETTES - 300H PD (630A)

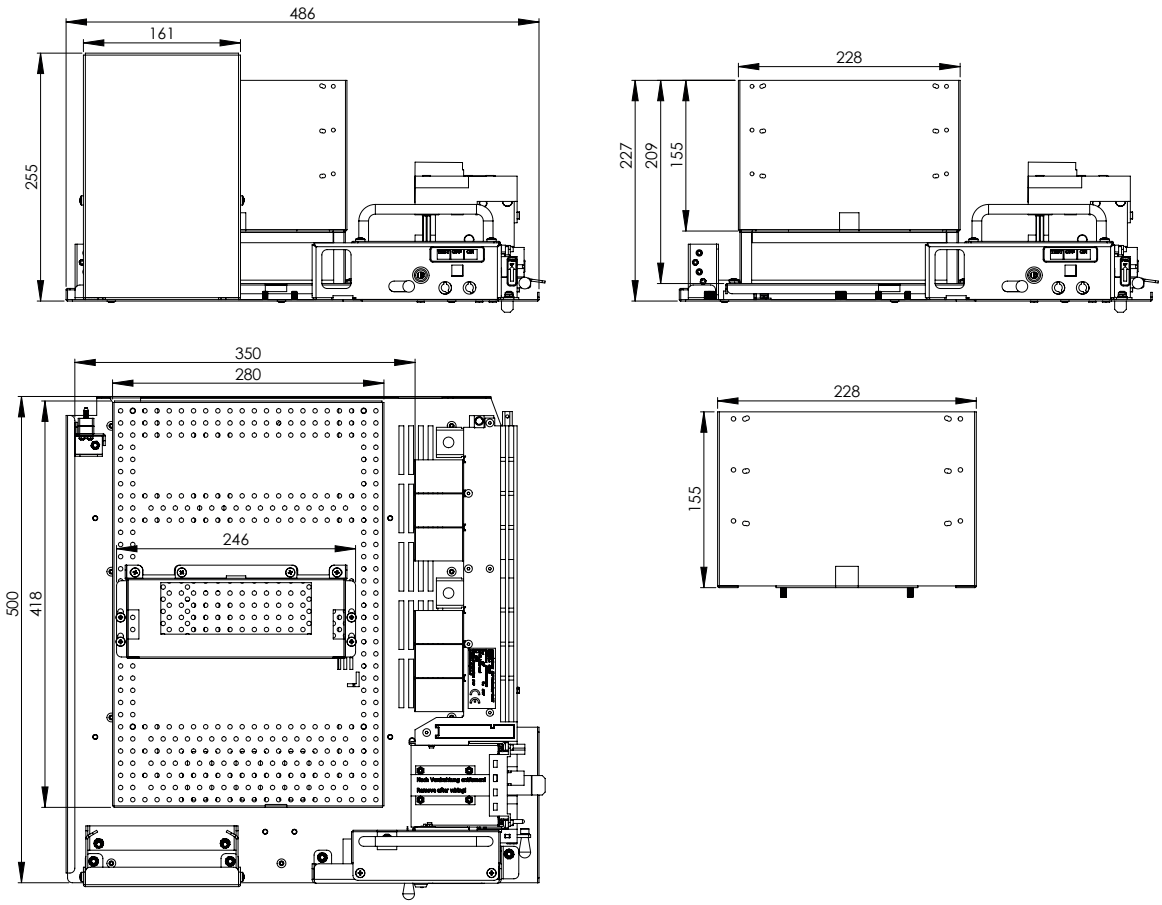

tekpan®
INDUSTRIAL ENCLOSURES & CABINETS

A6

PDS

UPGRADE THE POWER