B2.6

FEEDER MODULE ASSEMBLY

KYT-070
11/2021

PDS
UPGRADE THE POWER

Update Notes

Contents

Tools Symbol Guide


Cross


Slot

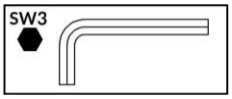

M4 Allen Key

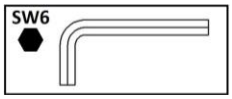

M8 Allen Key

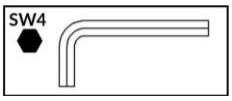

M5 Allen Key

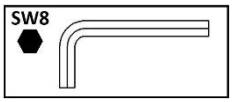

M10 Allen Key

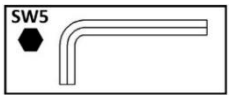

M6 Allen Key

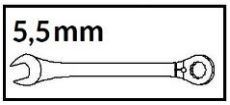

M3 Spanner

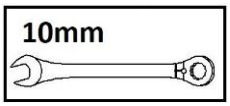

M6 Spanner

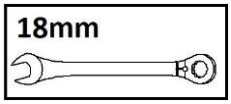

M12 Spanner

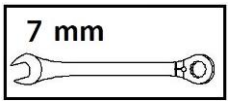

M4 Spanner

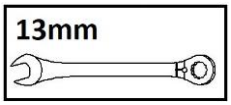

M8 Spanner

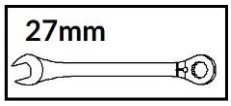

M18 Spanner

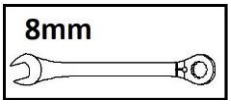

M5 Spanner

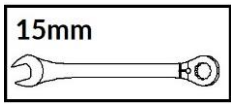

M10 Spanner

Caution: **For safety precaution ; Protective gloves and equipments must be used while assembly.**

As additional tools for assembly;

- Torque wrench features:
  - ✓ Tightening torque : 75 N.m
  - ✓ It has a reduced thickness, can be easily used to access non accessible joints/fishplates and between busbars.
- Torque wrench an accessories:
  - ✓ Wrench shaft - mandatory
  - ✓ Extra-thin pawl adapter - mandatory
  - ✓ Pawl for ordinary sockets
- Extra-thin sockets for pawl + shaft:
  - ✓ 13 mm extra-thin low socket
  - ✓ 13 mm extra-thin high socket
  - ✓ 15 mm extra-thin low socket
  - ✓ 15 mm extra-thin high socket
  - ✓ 18 mm extra-thin low socket
  - ✓ 18 mm extra-thin high socket

Torque Table for Screw/Bolt

Recommended tightening torque for mechanical and electrical links *8.8-class screws (with nut + washers)*	
Diameter of Screw	Tightening Torque (N.m)
M3	1.5
M4	3.5
M5	7
M6	13
M8	28
M10	50
M12	75

Tightening torque for electrical links on the devices and for their fixing:

Marking varnish:

After tightening each electrical connection to the appropriate torque, apply somevarnish:

- ✓ Between the nut and the screw or
- ✓ Between the screw head and the copper bar or
- ✓ Between the device for tightening on a threaded part

Varnish should not block the screw:

- ✓ It allows operator inspection, to verify if the bolts/ nut are tightened or not.
- ✓ It facilitates the identification of any loose nuts during the switchboard's lifetime.

Varnish features:

- ✓ Coloured acrylic varnish, indelible and able to resist a 150° C temperature.
- ✓ PDS recommends a red varnish as a standard to identify the panelbuilder's work.
- ✓ Other colours can be used by the contractoror any operators entitled to work on the switchboard after its commissioning.

Screw/Bolt/Special Parts for Assembly

Philips Pan Head Screw

M6x23 Philips Flat Head Screw (Teos)

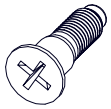

M5x20 Philips Flat Head Screw (Teos)

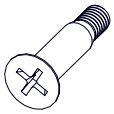

Philips Flat Head Screw

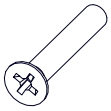

Hexagon Socket Head Bolt (Half Thread)

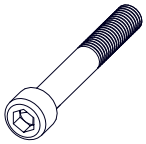

Hexagon Socket Head Bolt

Hexagon Socket Button Head Bolt

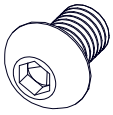

Hexagon Socket Flat Head Bolt

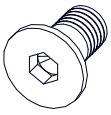

Hexagon Head Bolt (Half Tread)

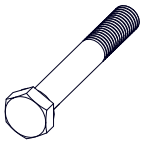

Hexagon Head Bolt

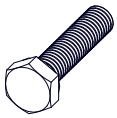

Internal Door Knob Bolt

Regular Nut

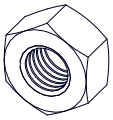

Flange Nut

Previling Torque Nut

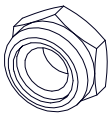

Cage Nut

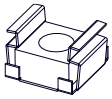

Plastic Cage Nut

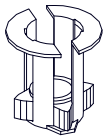

Flat Washer

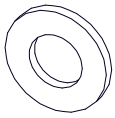

Spring Lock Washer

Toothed Lock Washer

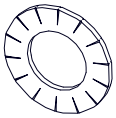

Wedge Lock Washer

1. BUSBAR ASSEMBLY

1.1 FOUR (4) FLAT BAR ASSEMBLY

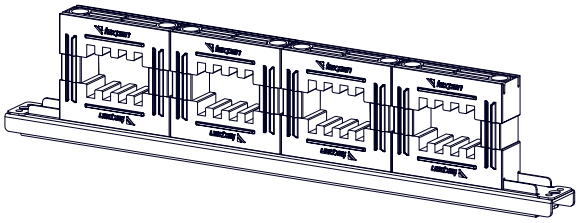

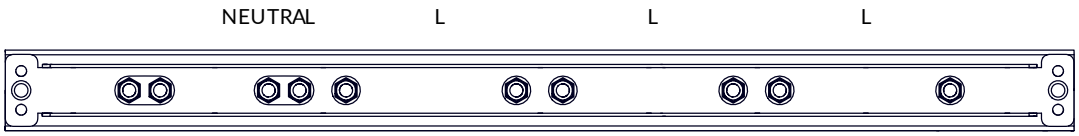

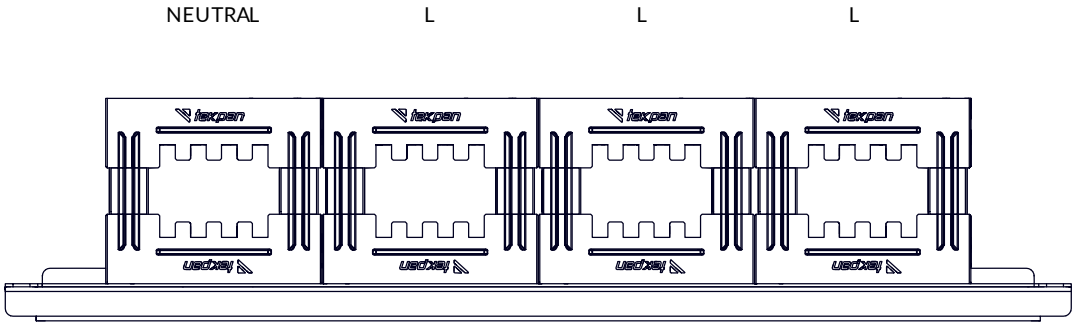

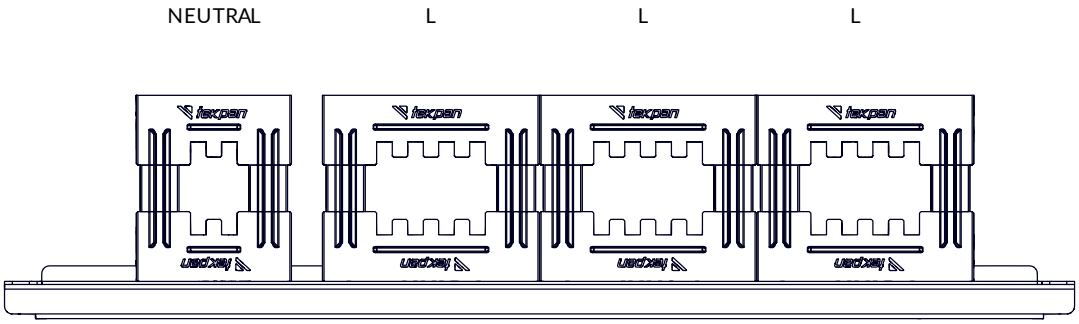

Neutral Section	Rated Current (In)	Flat Copper Size (mm) xQty	
		L1/L2/L3	Neutral(N)
1/2 N	2500A	40/10x4	40/10x2
1/1 N	2500A	40/10x4	40/10x4
1/2 N	3000A	50/10x4	50/10x2
1/1 N	3000A	50/10x4	50/10x4
1/2 N	3400A	60/10x4	60/10x2
1/1 N	3400A	60/10x4	60/10x4
1/2 N	4000A	80/10x4	80/10x2
1/1 N	4000A	80/10x4	80/10x4

1.1 FOUR (4) FLAT BAR ASSEMBLY

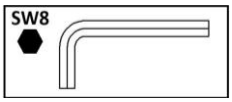

Required Packages:
1010.18X
1009.0XX/1011.XXX

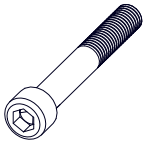

M10x H

M10

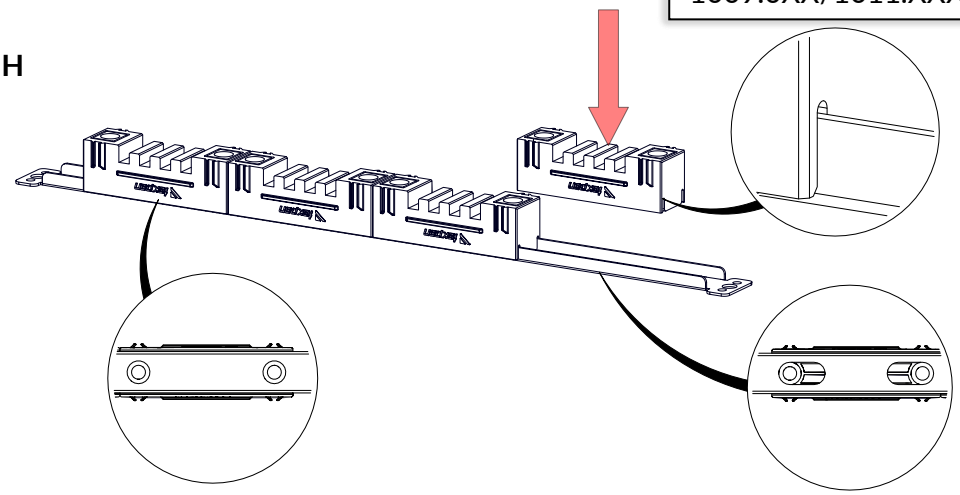

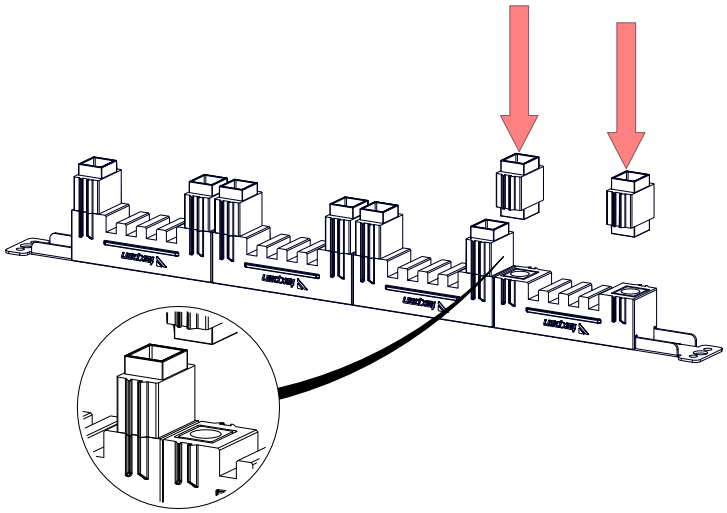

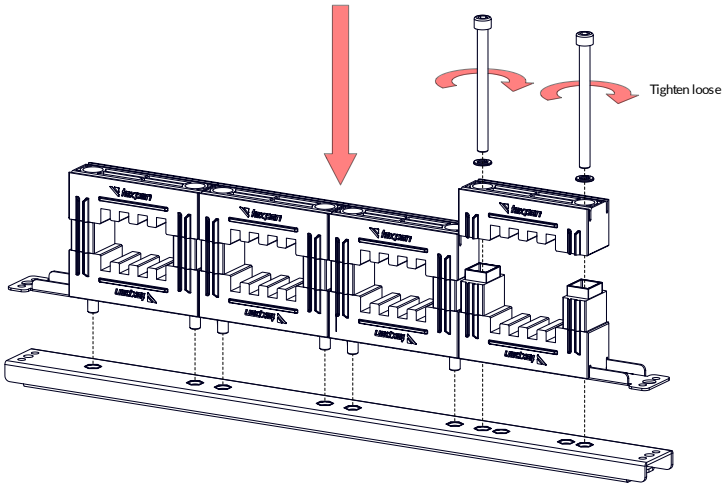

1.1 FOUR (4) FLAT BAR ASSEMBLY

Required Packages:
1010.18X
1009.0XX/1011.XXX

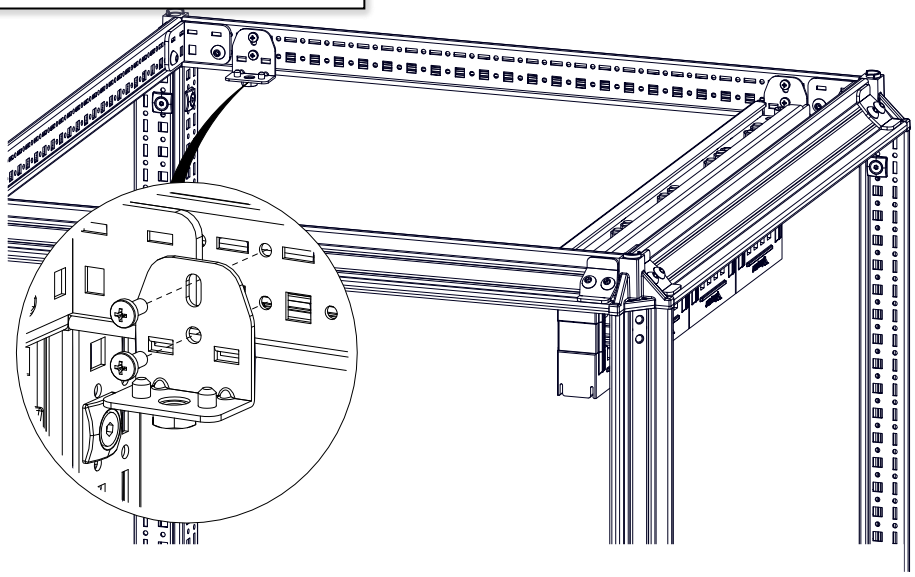

M5X10

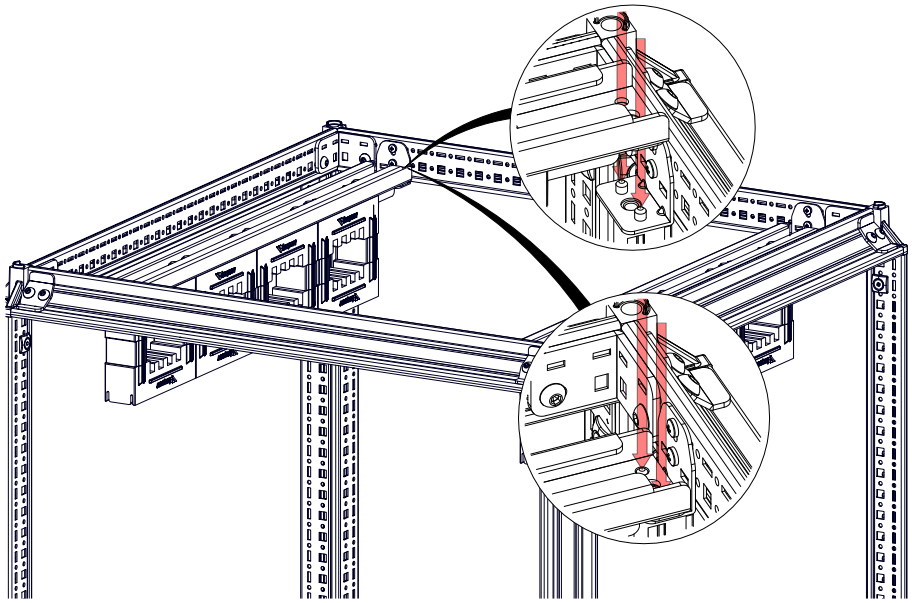

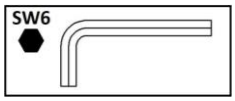

M8x20
1 pcs.

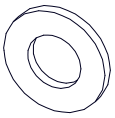

M8
1 pcs.

M8
1 pcs.

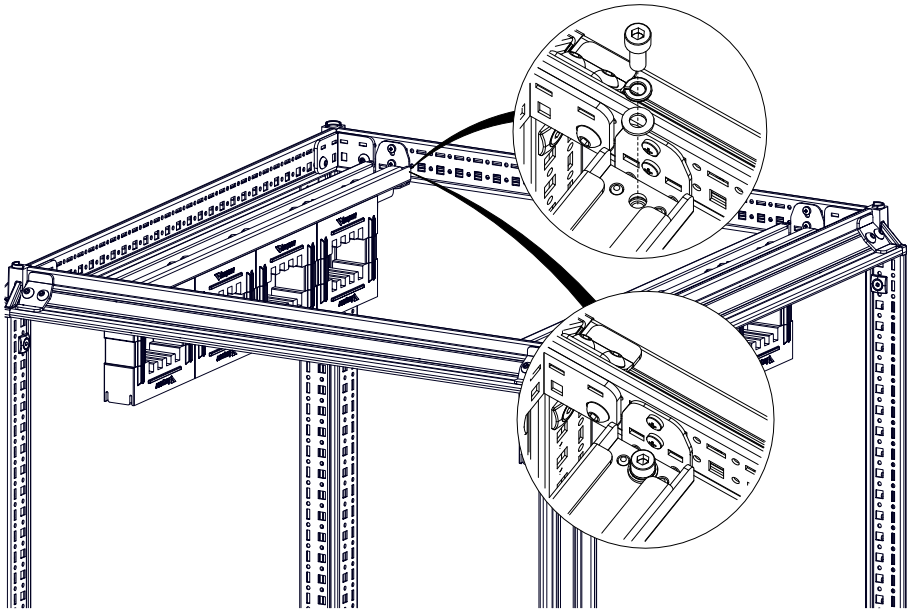

1.1 FOUR (4) FLAT BAR ASSEMBLY

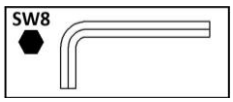

For 65kA and 85kA assemblies are using same steps.
65 kA safety distance between busbar holders Max. 550mm
85 kA safety distance between busbar holders Max. 350mm

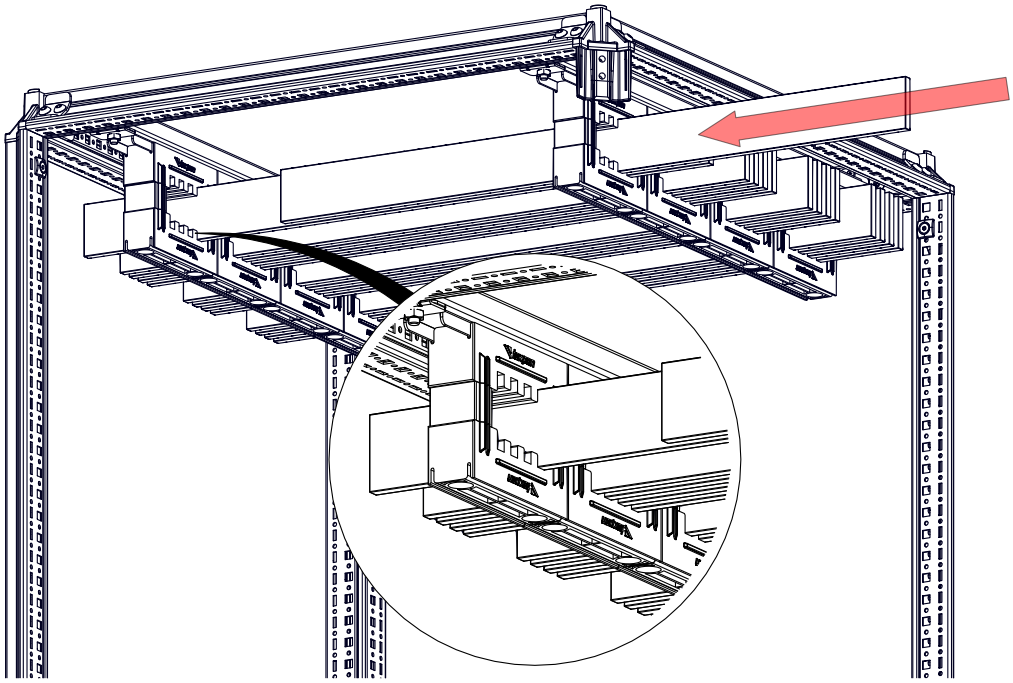

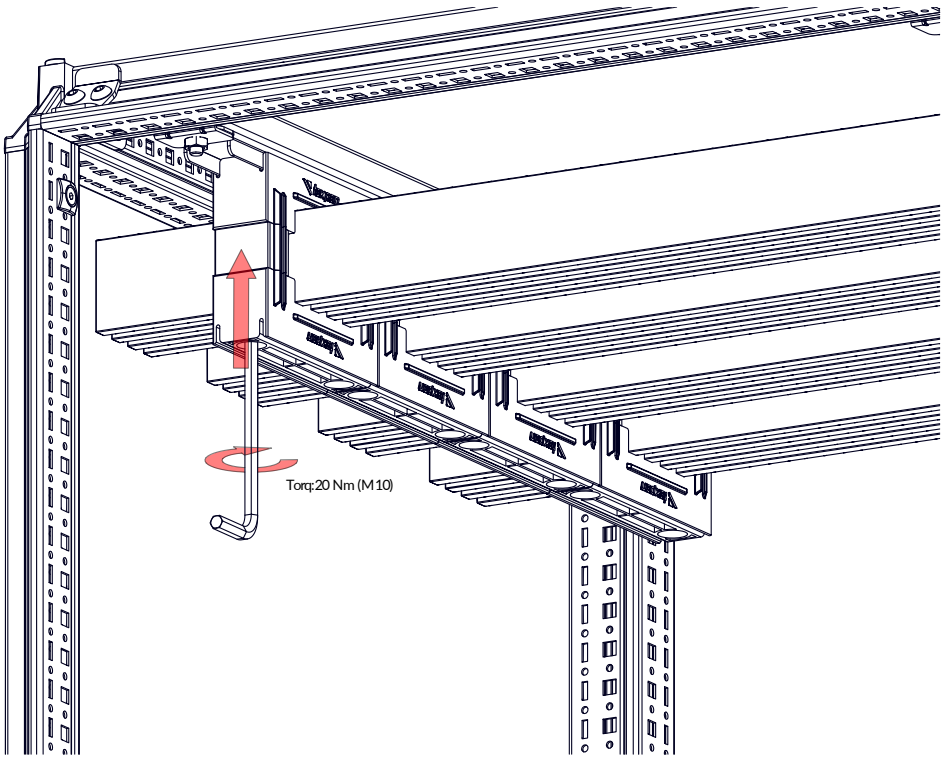

1.2 TWO (2) FLAT BAR ASSEMBLY

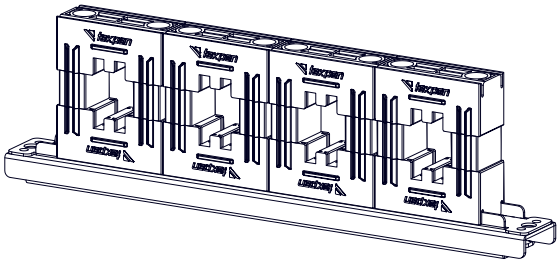

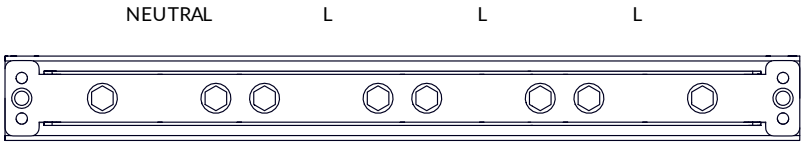

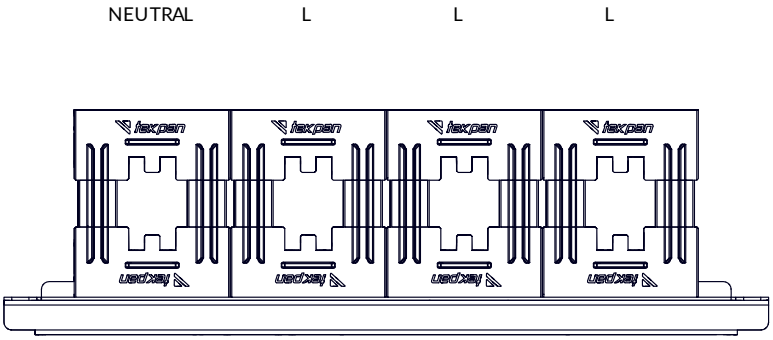

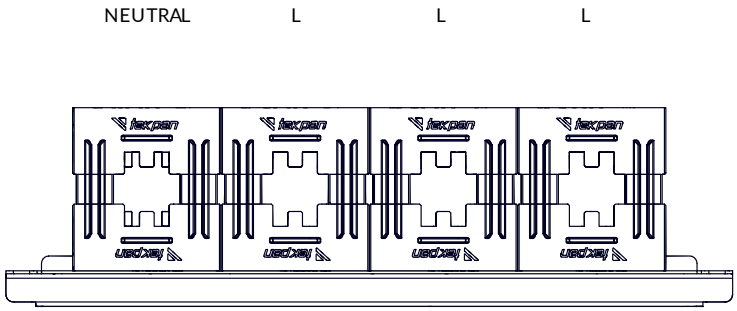

Neutral Section	Rated Current (In)	Flat Copper Size (mm) xQty	
		L1/L2/L3	Neutral(N)
1/2 N	1350A	40/10x2	40/5x2
1/1 N	1350A	40/10x2	40/10x2
1/2 N	1620A	50/10x2	50/5x2
1/1 N	1620A	50/10x2	50/10x2
1/2 N	1860A	60/10x2	60/5x2
1/1 N	1860A	60/10x2	60/10x2
1/2 N	2300A	80/10x2	40/10x2
1/1 N	2300A	80/10x2	80/10x2

1.2 TWO (2) FLAT BAR ASSEMBLY

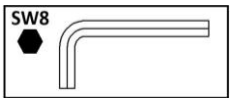

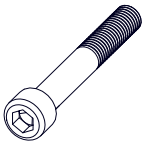

M10x H

M10

Required Packages:
1010.16X
1009.0XX/1011.XXX/1019.0XX

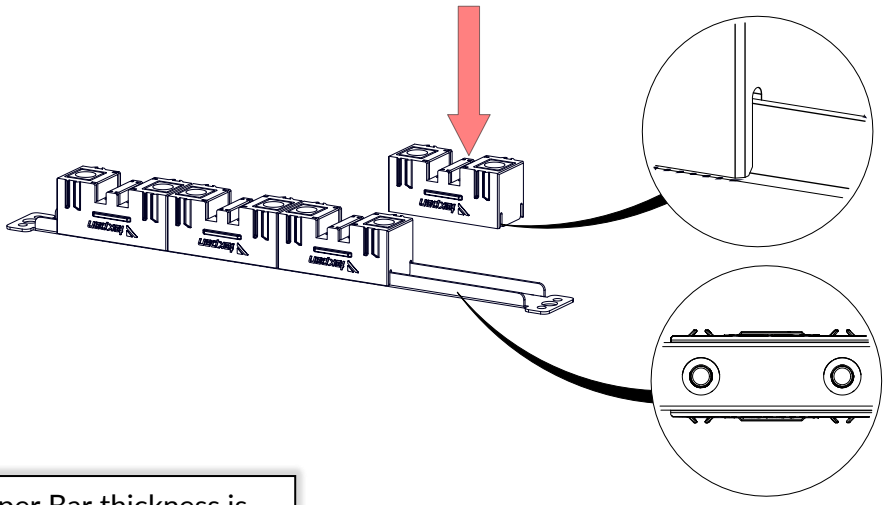

If 1/2 Section Neutral Coper Bar thickness is 5mm, Adapter must be used.

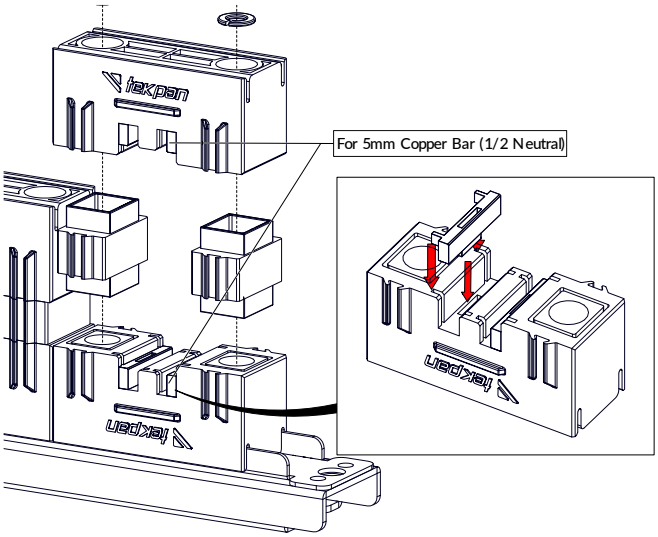

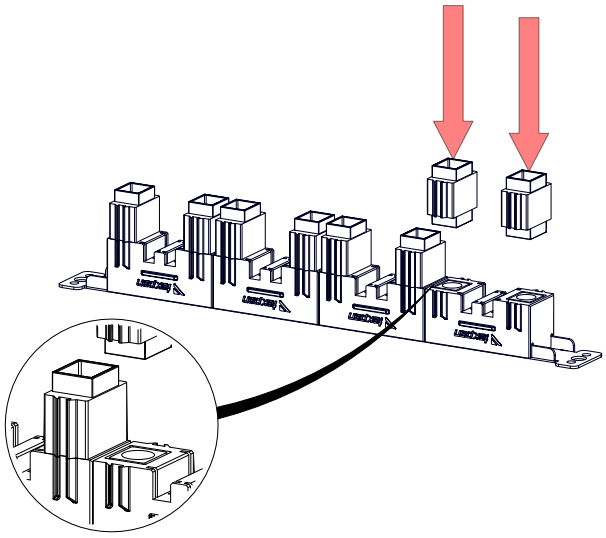

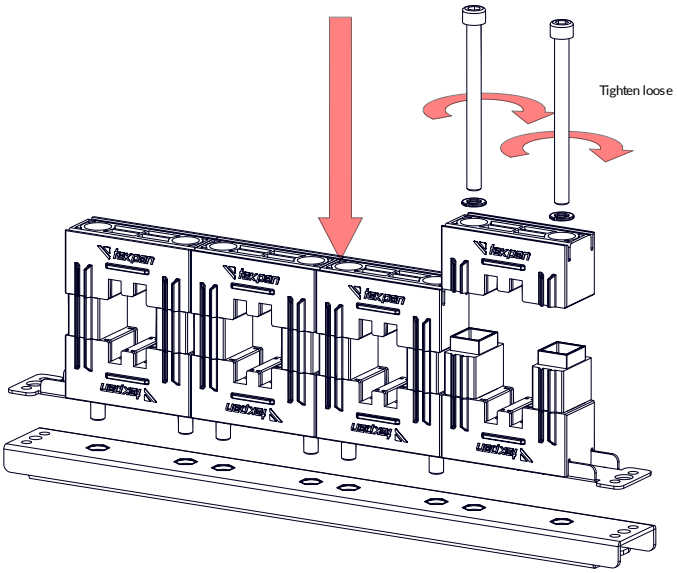

1.2 TWO (2) FLAT BAR ASSEMBLY

Required Packages:
1010.16X
1009.0XX/1011.XXX/1019.0XX

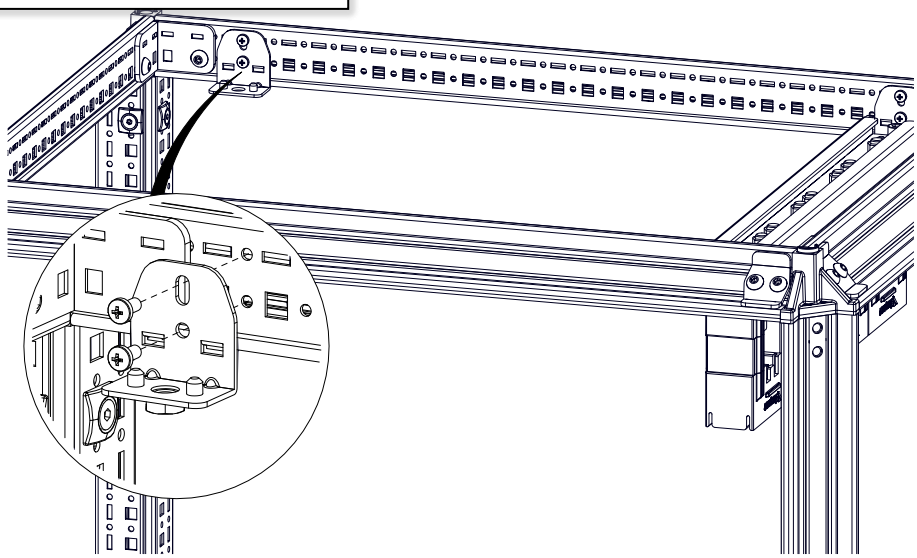

M5X10

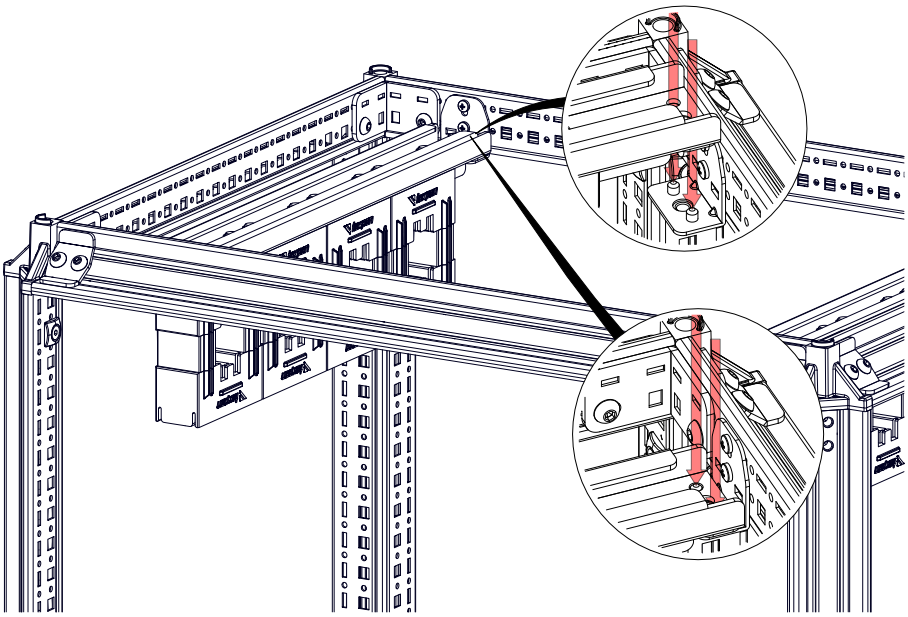

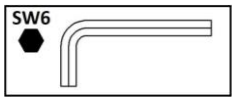

M8x20
1 pcs.

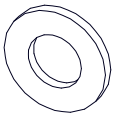

M8
1 pcs.

M8
1 pcs.

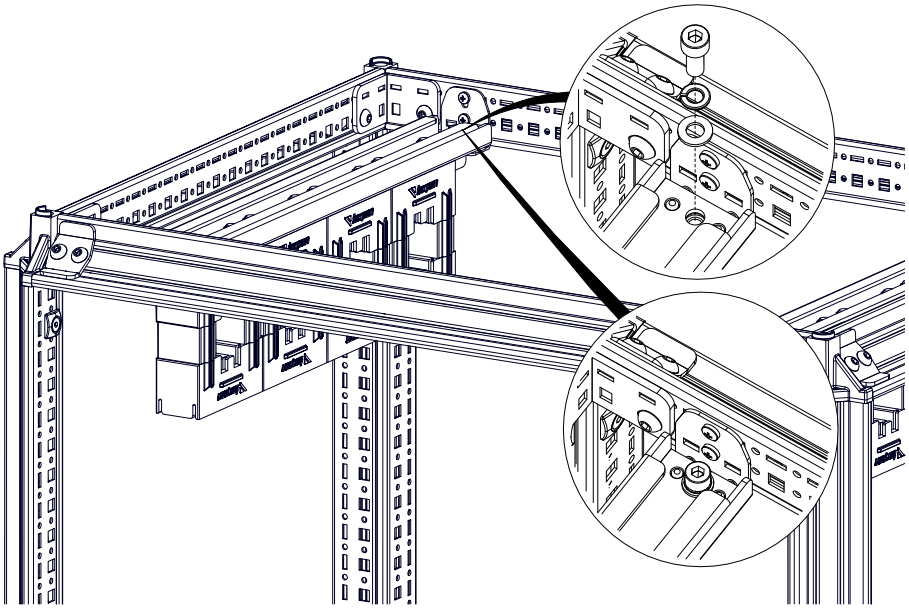

1.2 TWO (2) FLAT BAR ASSEMBLY

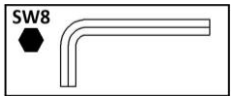

For 65kA and 85kA assemblies are using same steps.
65 kA safety distance between busbar holders Max. 550mm
85 kA safety distance between busbar holders Max. 350mm

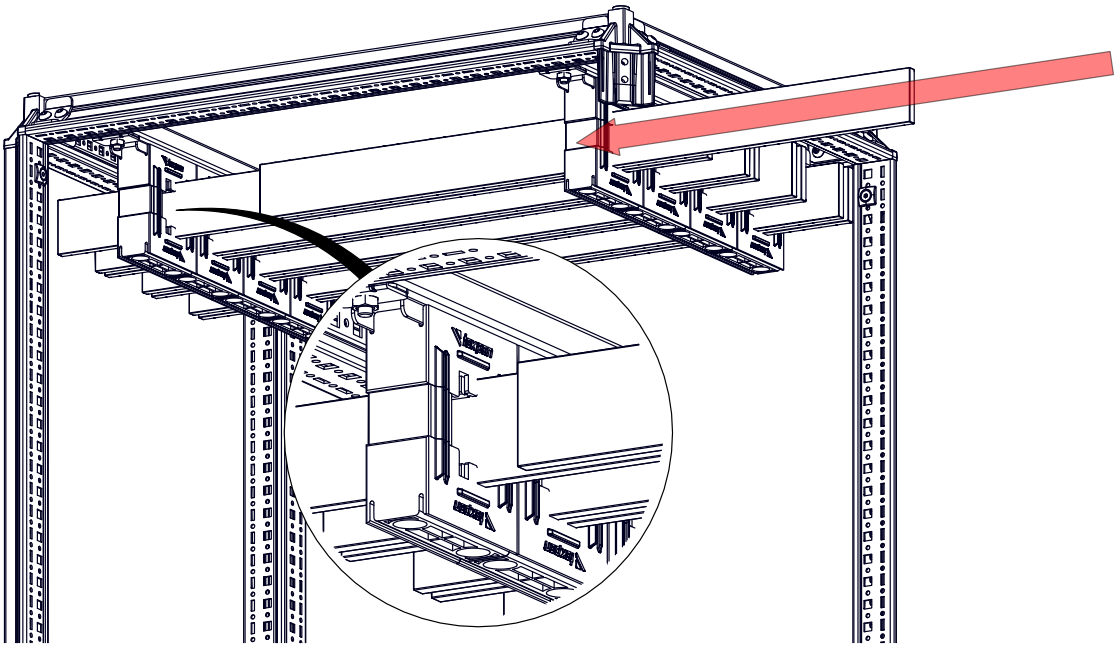

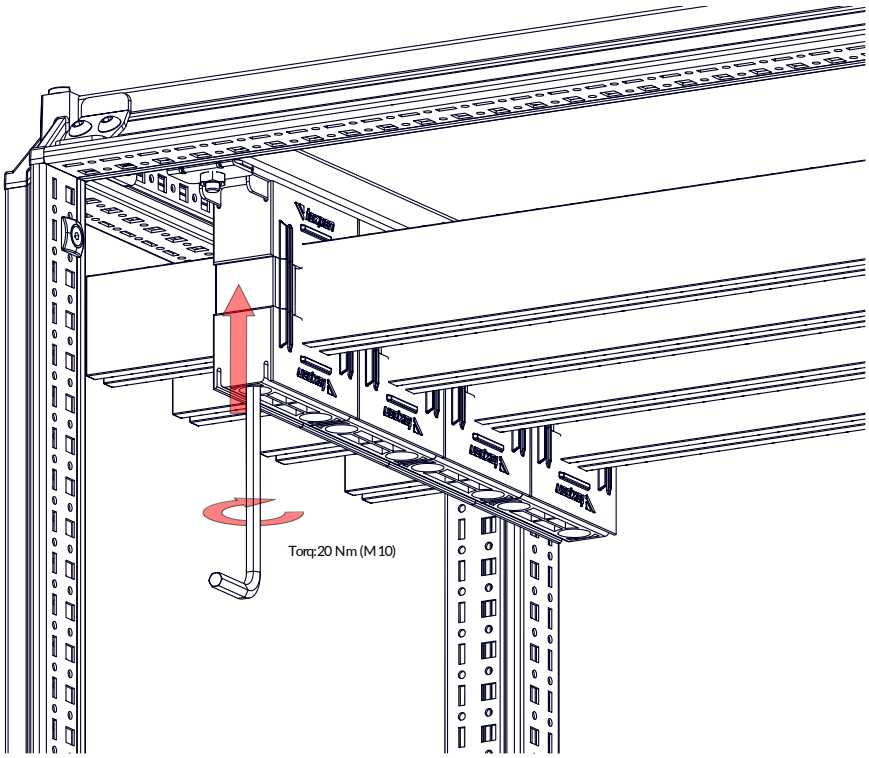

2. EARTHING BAR ASSEMBLY

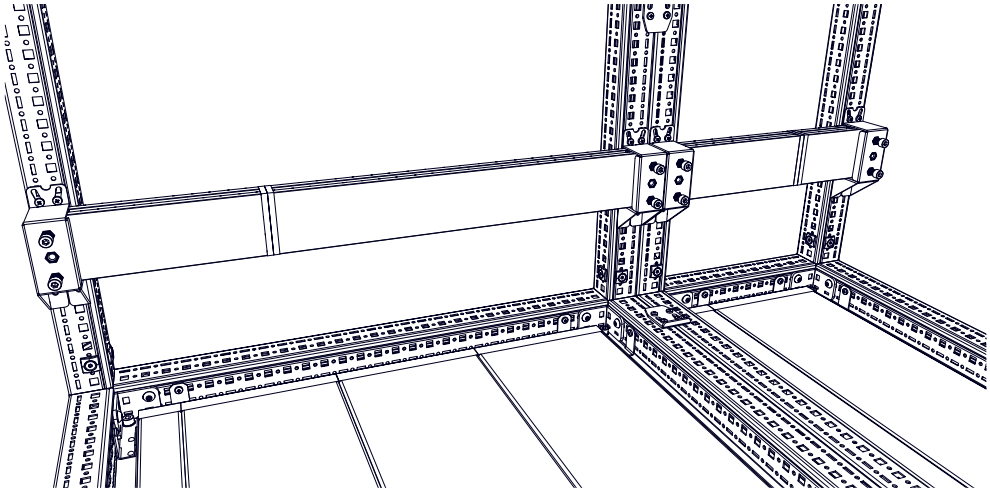

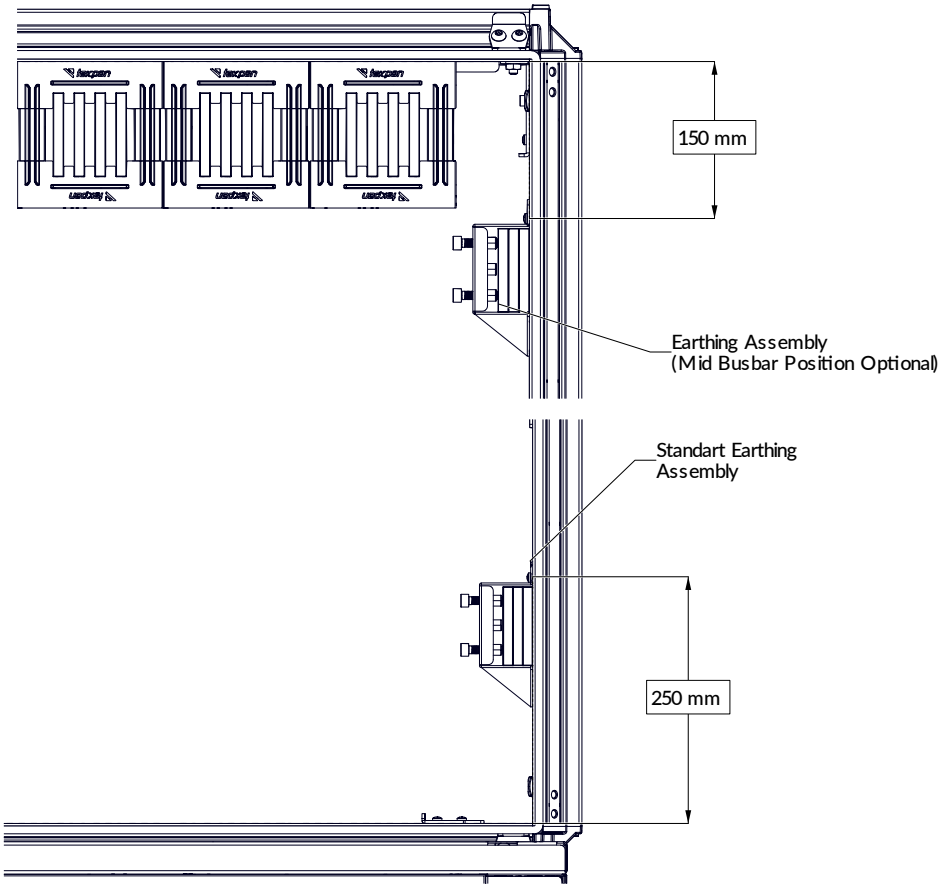

Neutral Section	Rated Current (In)	Flat Copper Size (mm) xQty
		PE
1/2 N	1350A	20/5x2
1/1 N	1350A	40/5x2
1/2 N	1620A	25/5x2
1/1 N	1620A	50/5x2
1/2 N	1860A	30/5x2
1/1 N	1860A	60/5x2
1/2 N	2300A	40/5x2
1/1 N	2300A	40/10x2

Neutral Section	Rated Current (In)	Flat Copper Size (mm) xQty
		PE
1/2 N	2500A	40/5x2
1/1 N	2500A	40/10x2
1/2 N	3000A	50/5x2
1/1 N	3000A	50/10x2
1/2 N	3400A	60/5x2
1/1 N	3400A	60/10x2
1/2 N	4000A	40/10x2
1/1 N	4000A	80/10x2

2. EARTHING BAR ASSEMBLY

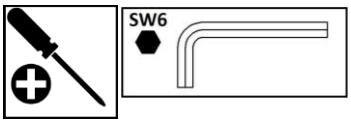

Required Packages:
1012.0XX

M8x25/35

M5X10

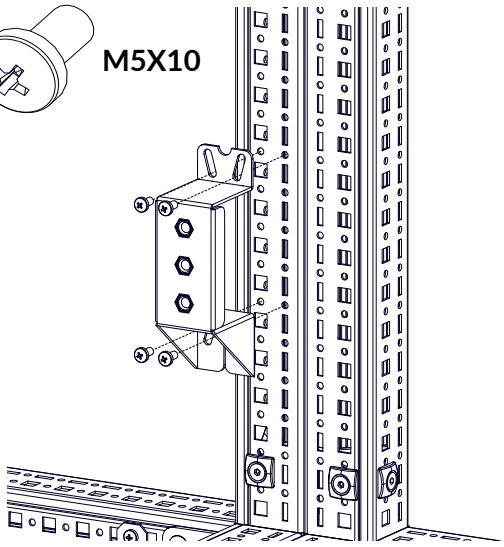

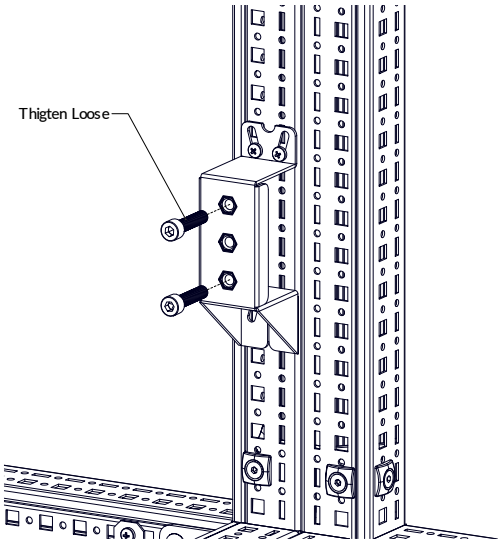

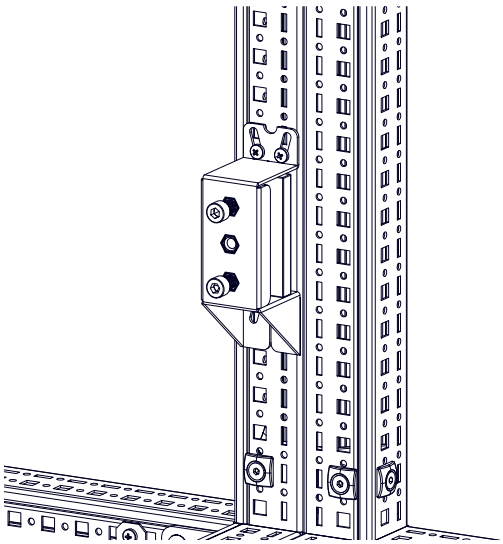

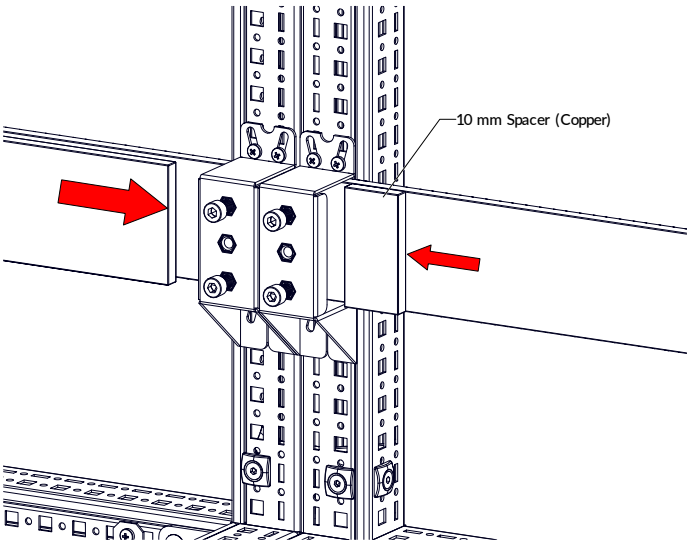

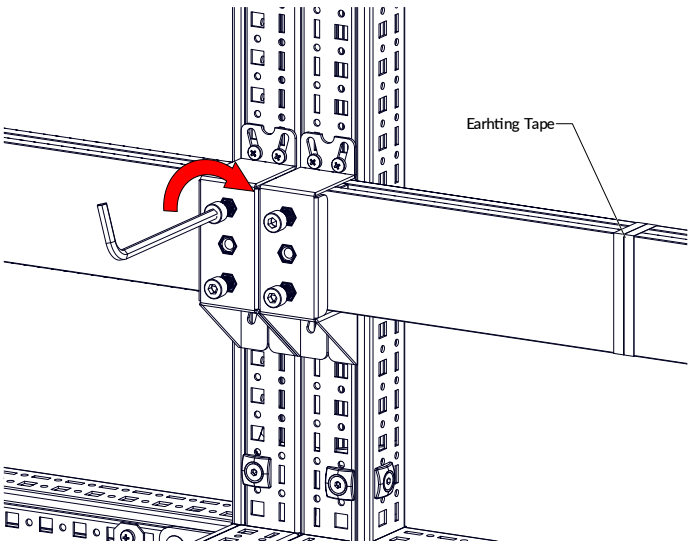

3. PEN BAR ASSEMBLY

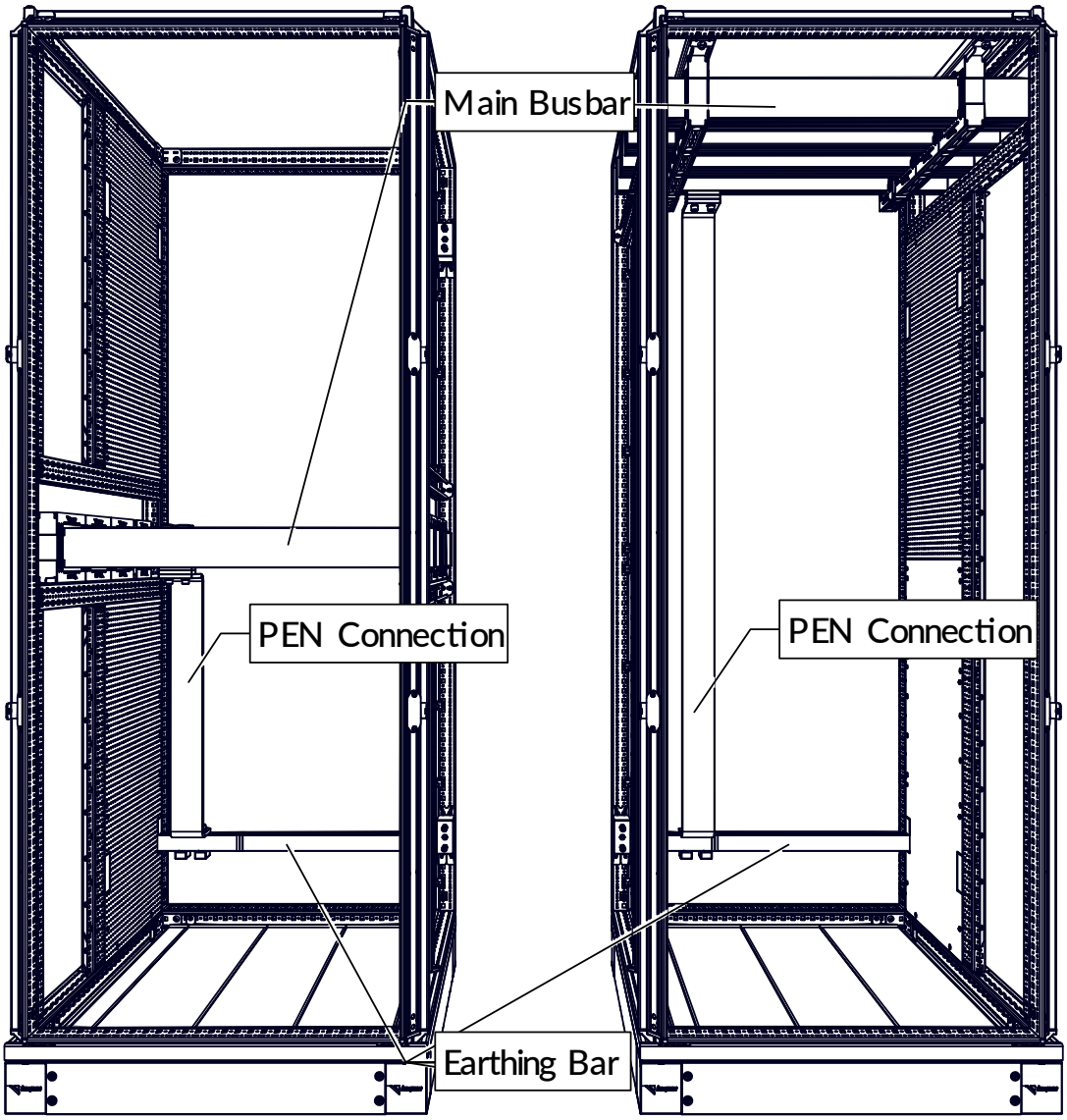

Neutral Section	Rated Current (In)	Flat Copper Size (mm) xQty	
		Neutral(N)	PE
1/2 N	1350A	40/5x2	20/5x2
1/2 N	1620A	50/5x2	25/5x2
1/2 N	1860A	60/5x2	30/5x2
1/2 N	2300A	40/10x2	40/5x2

Neutral Section	Rated Current (In)	Flat Copper Size (mm) xQty	
		L1/L2/L3	PE
1/2 N	2500A	40/10x4	40/5x2
1/2 N	3000A	50/10x4	50/5x2
1/2 N	3400A	60/10x4	60/5x2
1/2 N	4000A	80/10x4	40/10x2

3. PEN BAR ASSEMBLY

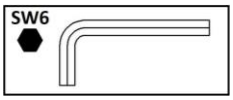

Required Packages:
1066.XXX

M8xH

TOP BUSBAR-PEN CONNECTION

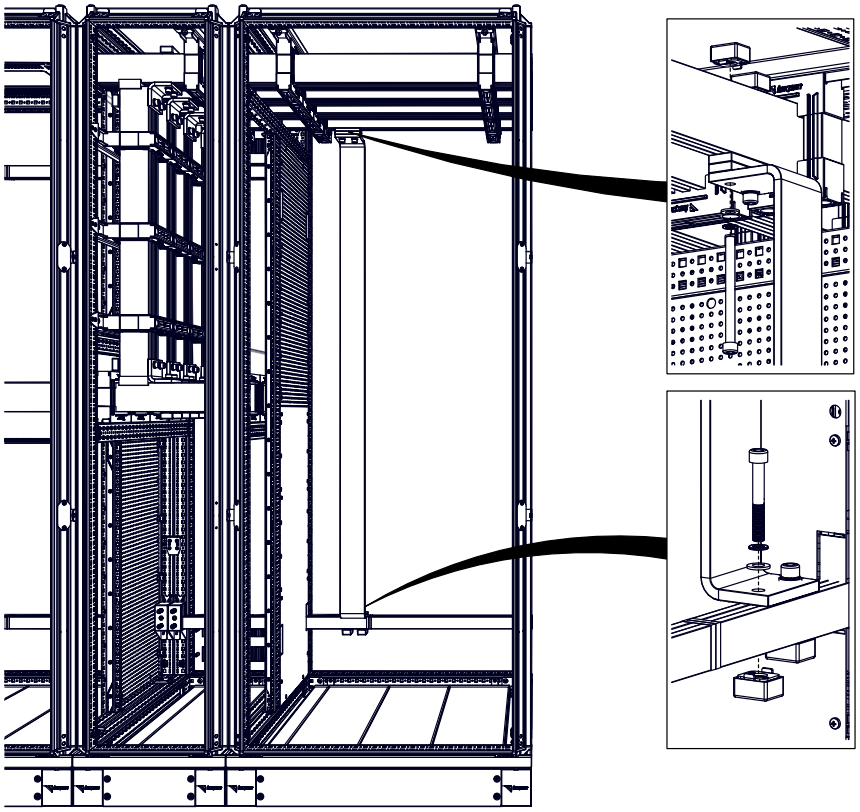

MID BUSBAR-PEN CONNECTION

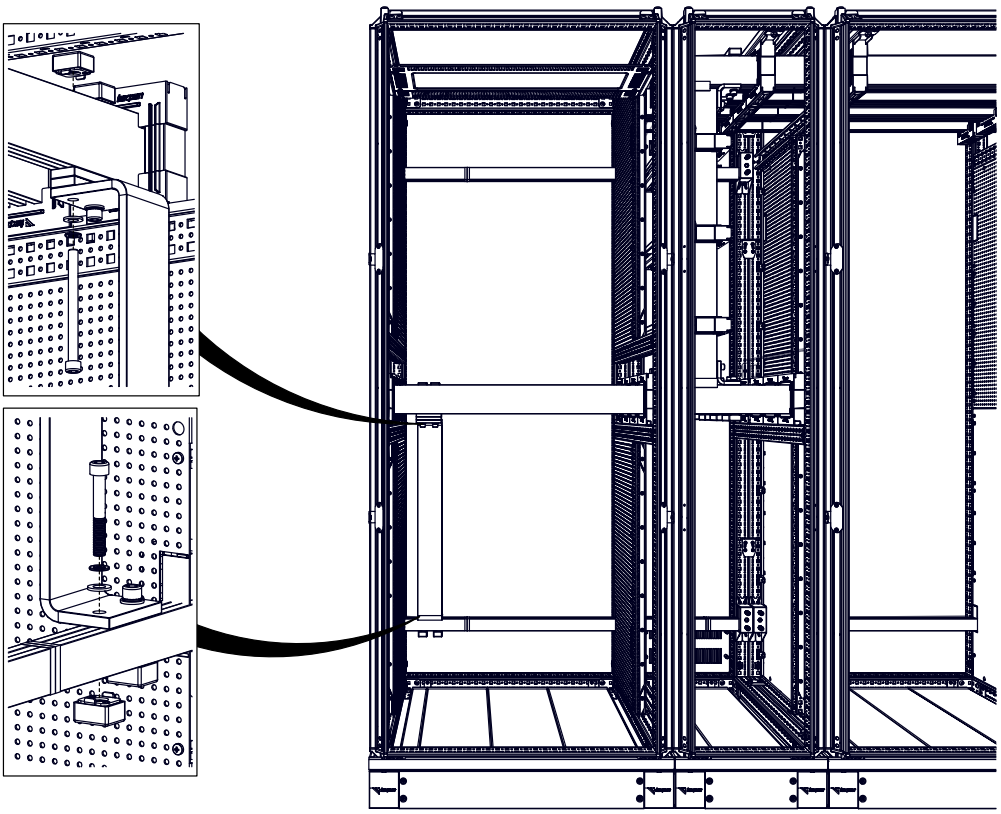

4. SCISSILE RAIL ASSEMBLY

Required Packages:
600D:944.424
800D:944.425
Brackets:944.42X

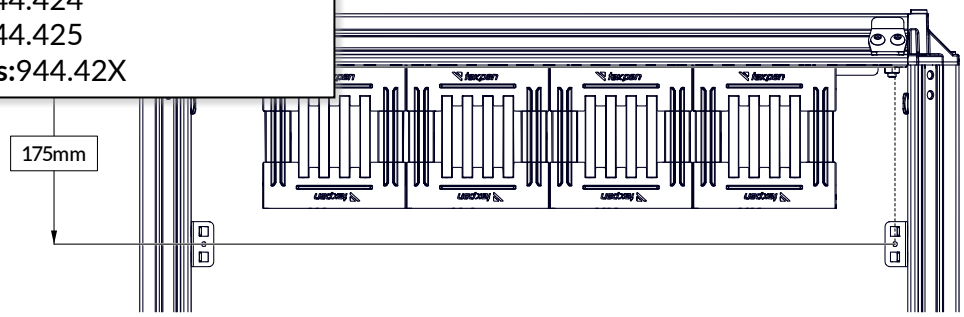

M5X10

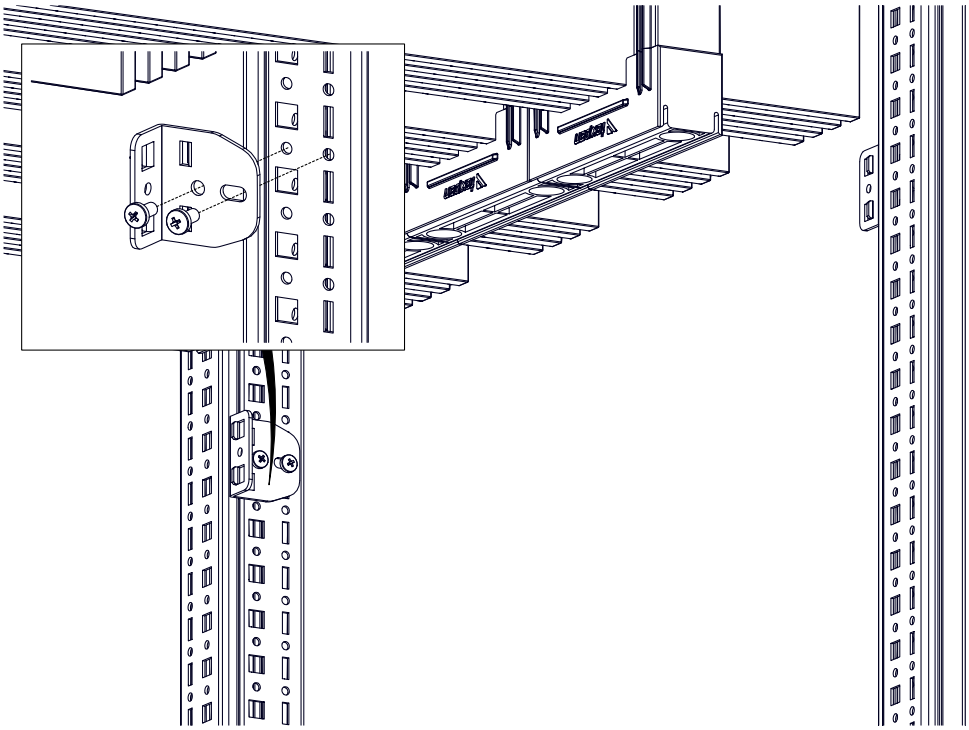

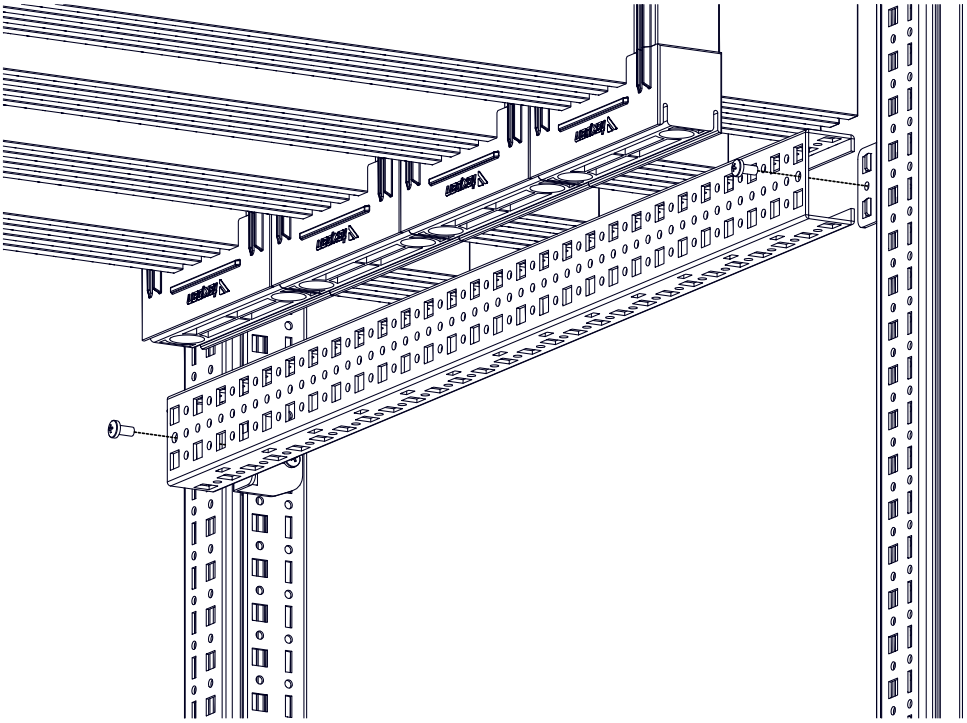

4. SCISSILE RAIL ASSEMBLY

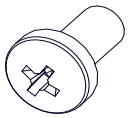

M5X10

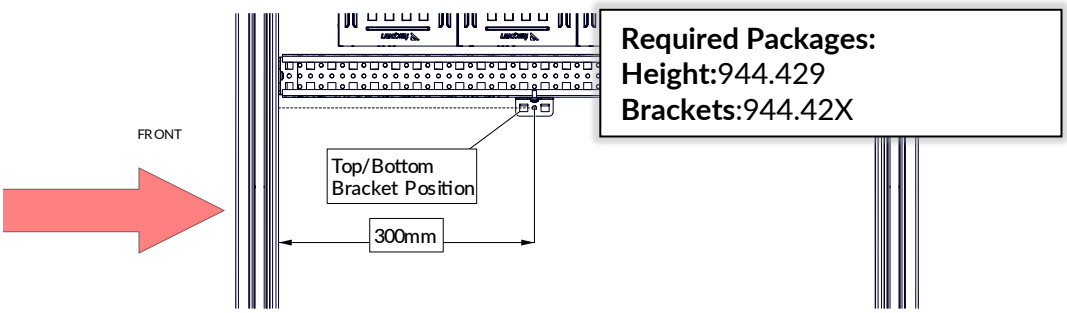

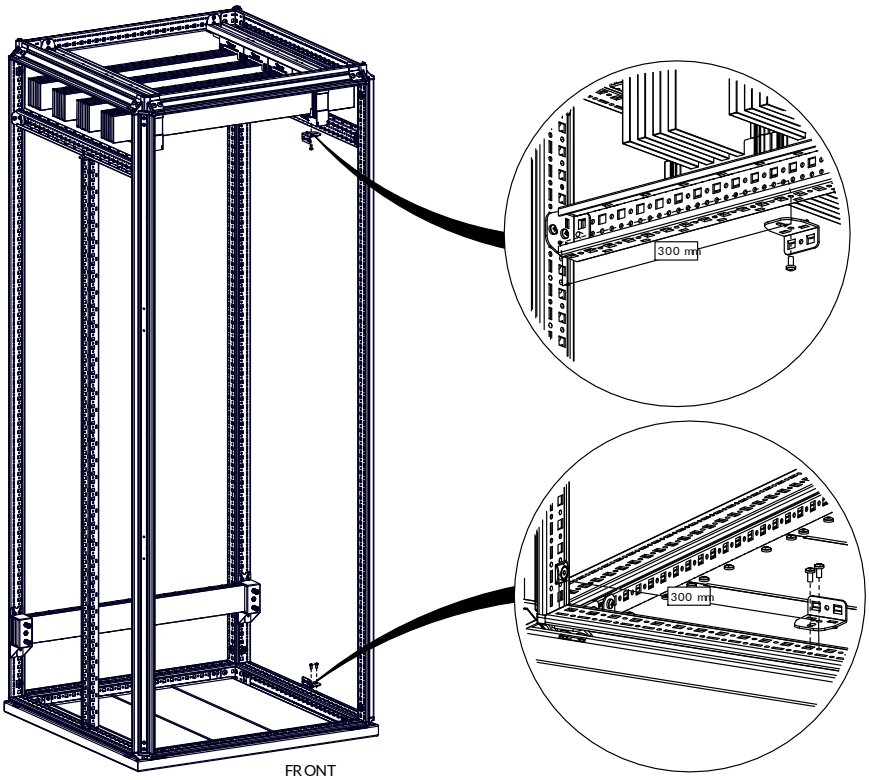

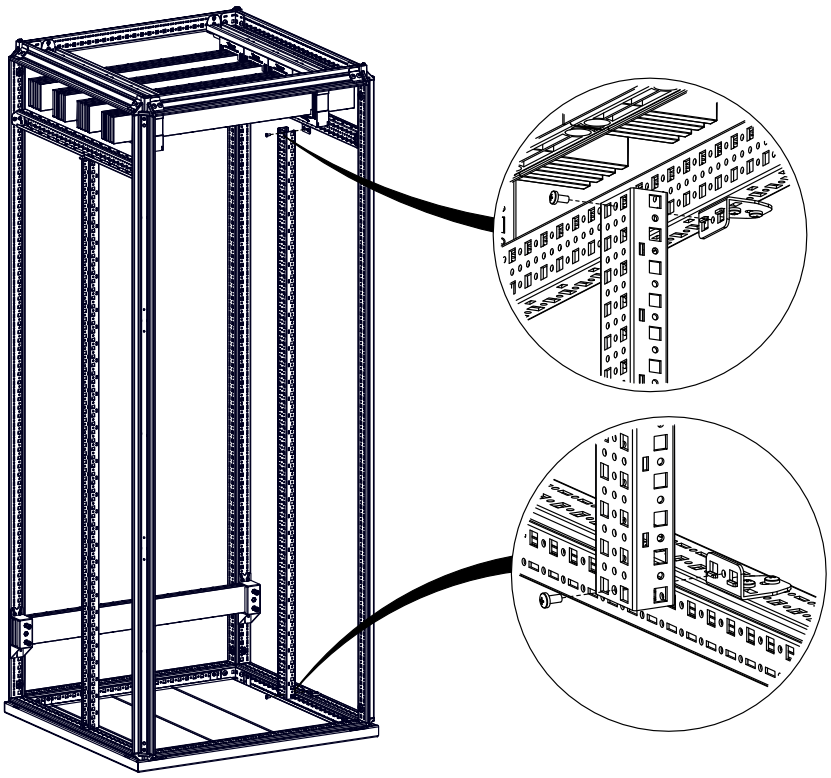

5. SYSTEM-2 PROFILE ASSEMBLY

Required Packages:
1006.X18

M5X10

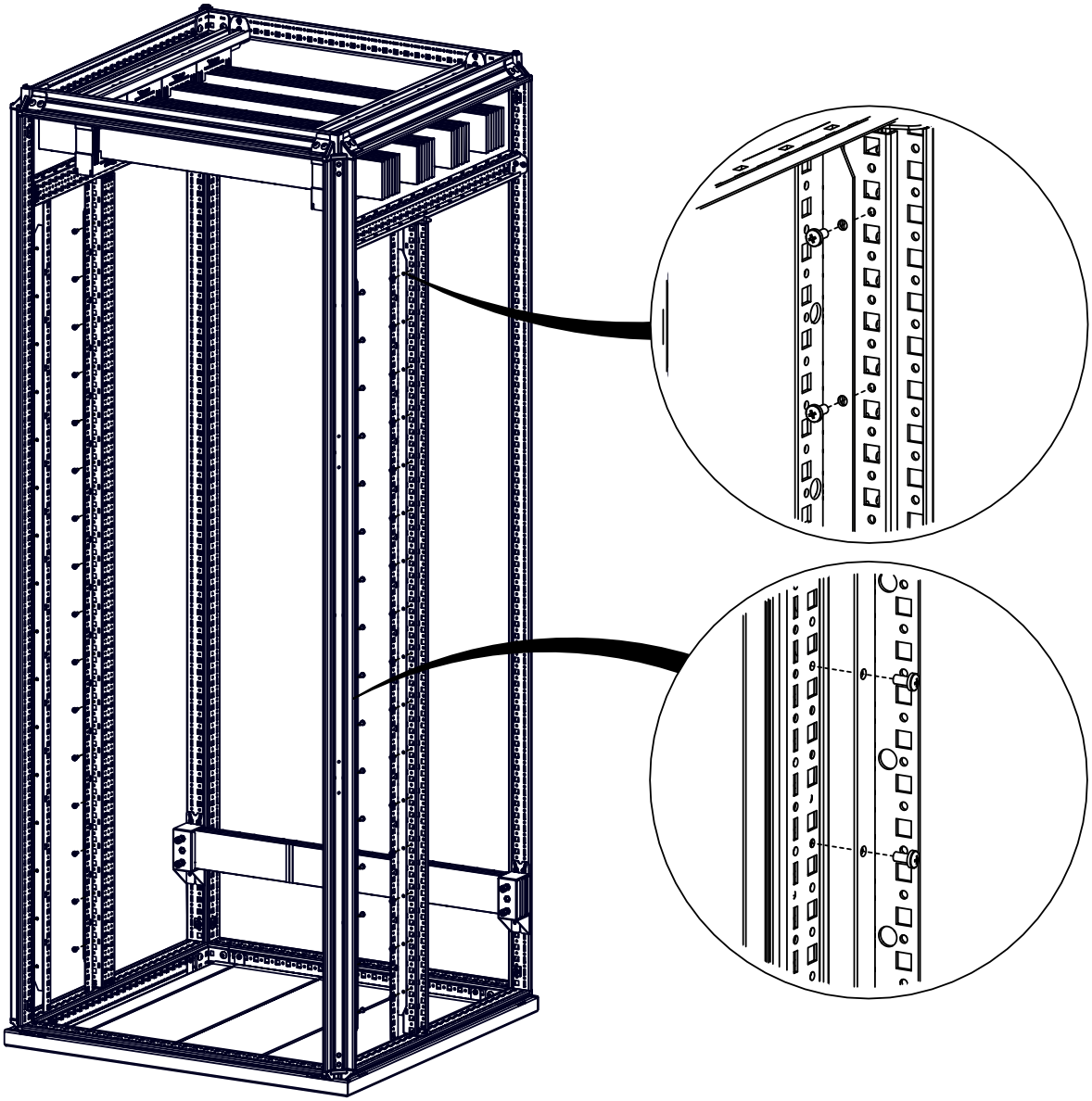

6. SYSTEM-2 REAR SEPARATION COVER ASSEMBLY

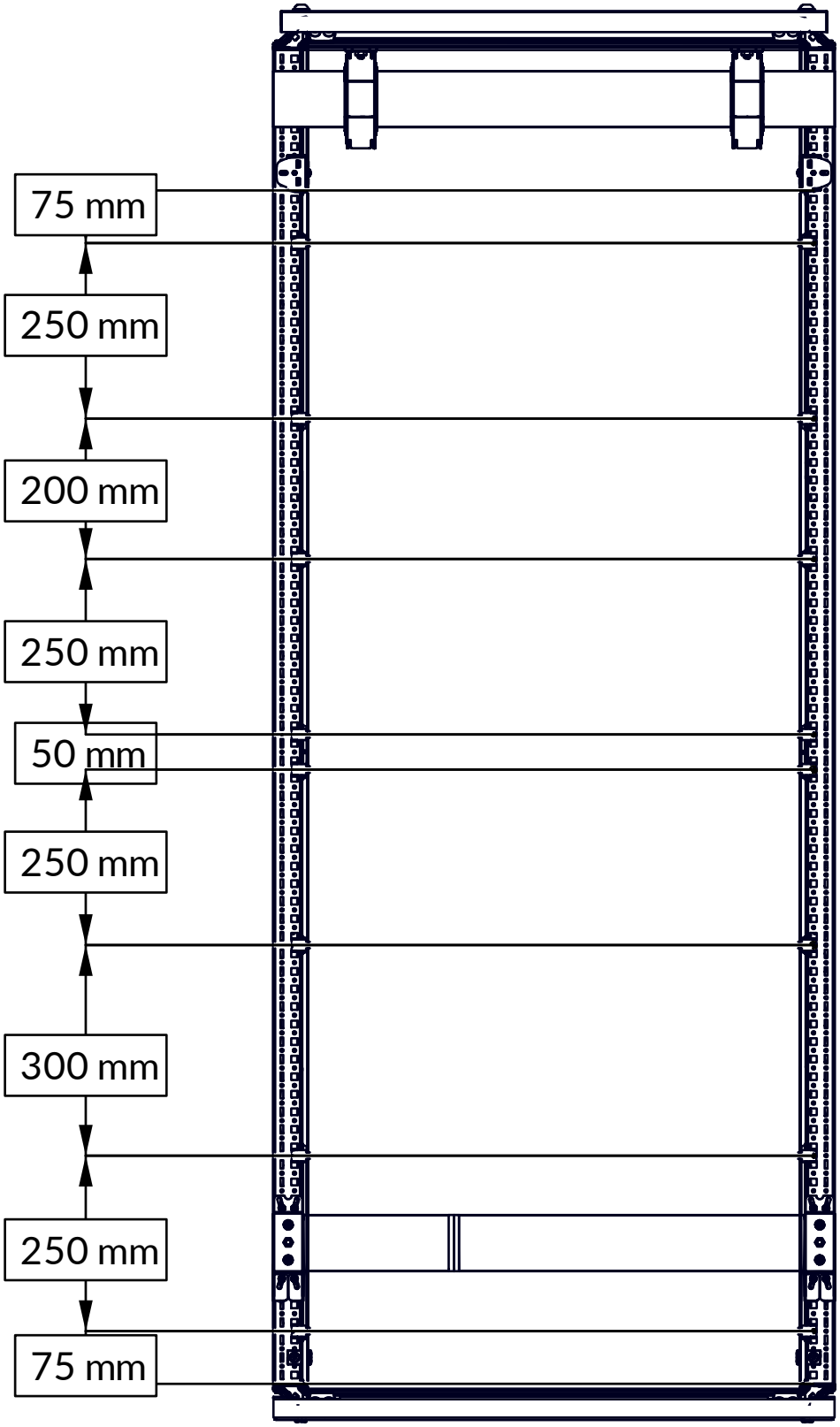

6. SYSTEM-2 REAR SEPARATION COVER ASSEMBLY

Required Packages:
600D:1014.680/1014.690
800D:1014.880/1014.890

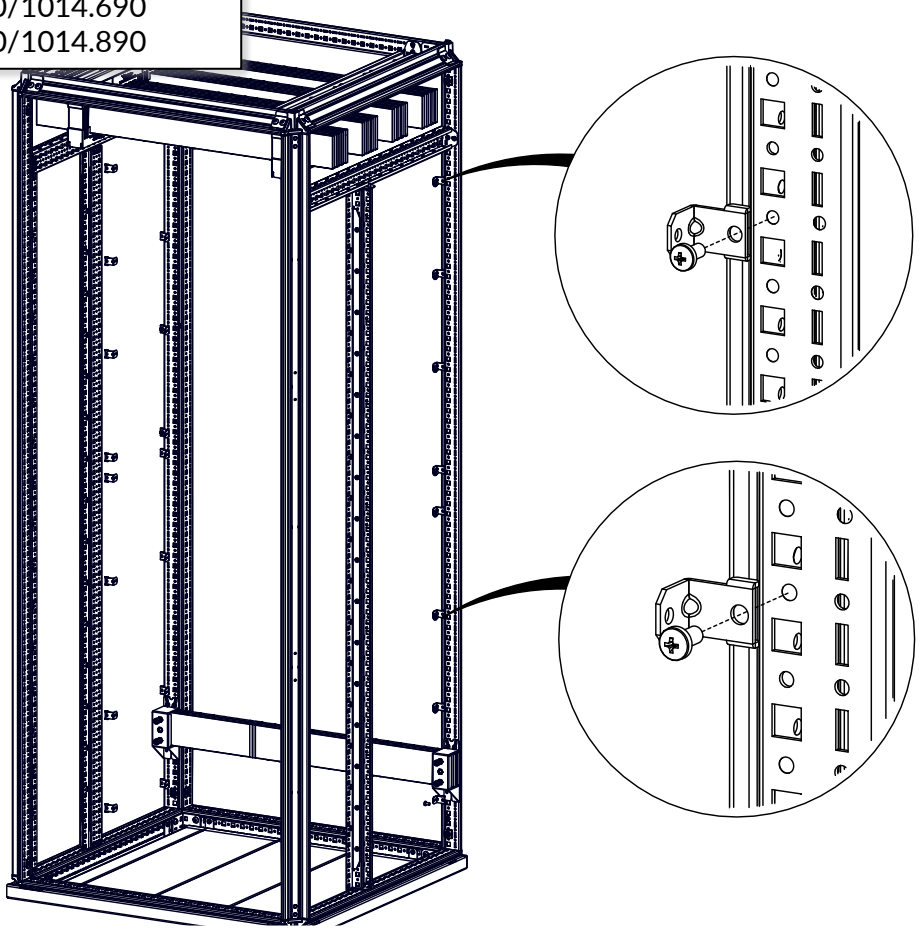

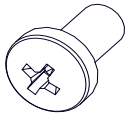

M5X10

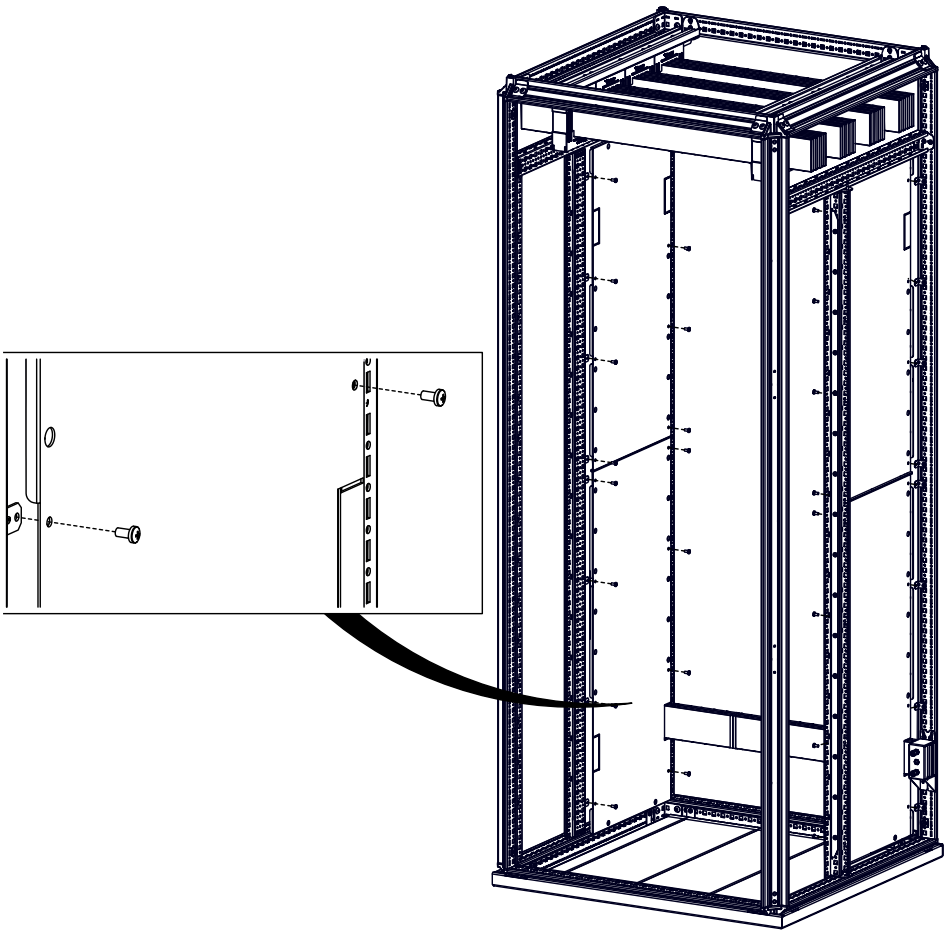

7. BUSBAR SEPARATION SHELF-FRONT COVER ASSEMBLY

7.1 BUSBAR SEPARATION SHELF ASSEMBLY

Warning: This assembly step must be apply after cassette assembly (internal part assembly).

Required Packages:
400W:1008.040
600W:1008.060
800W:1008.080

M5X10

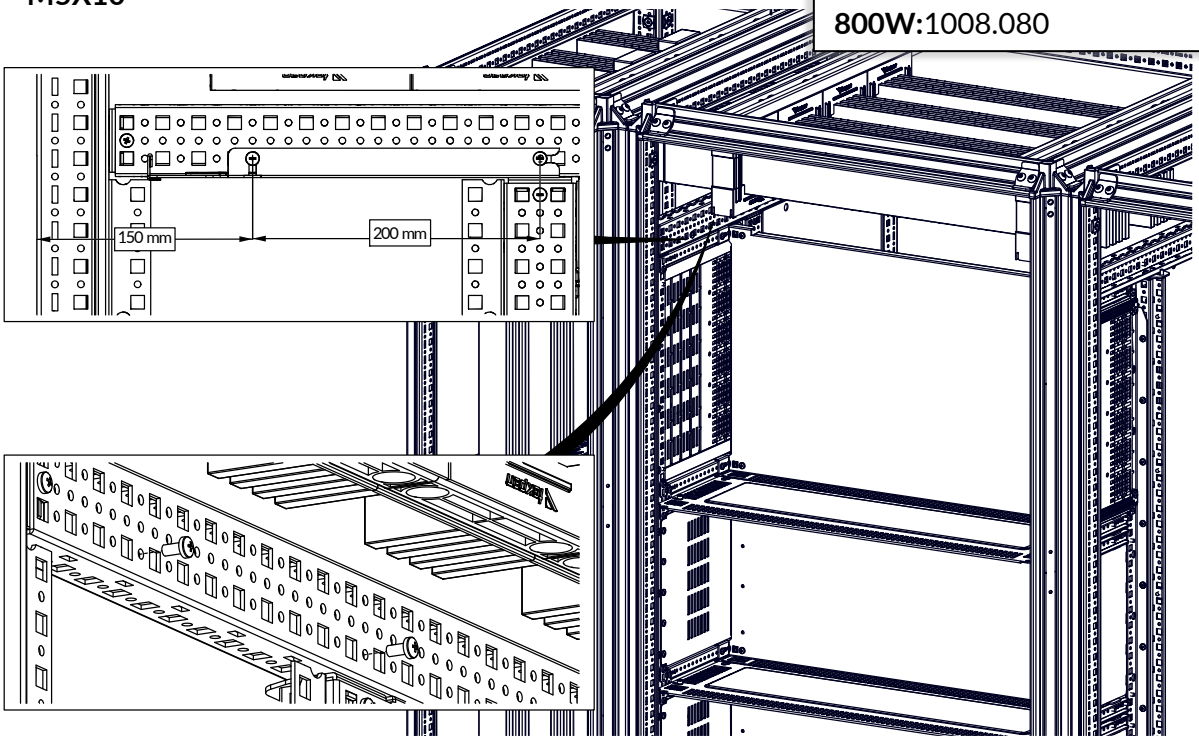

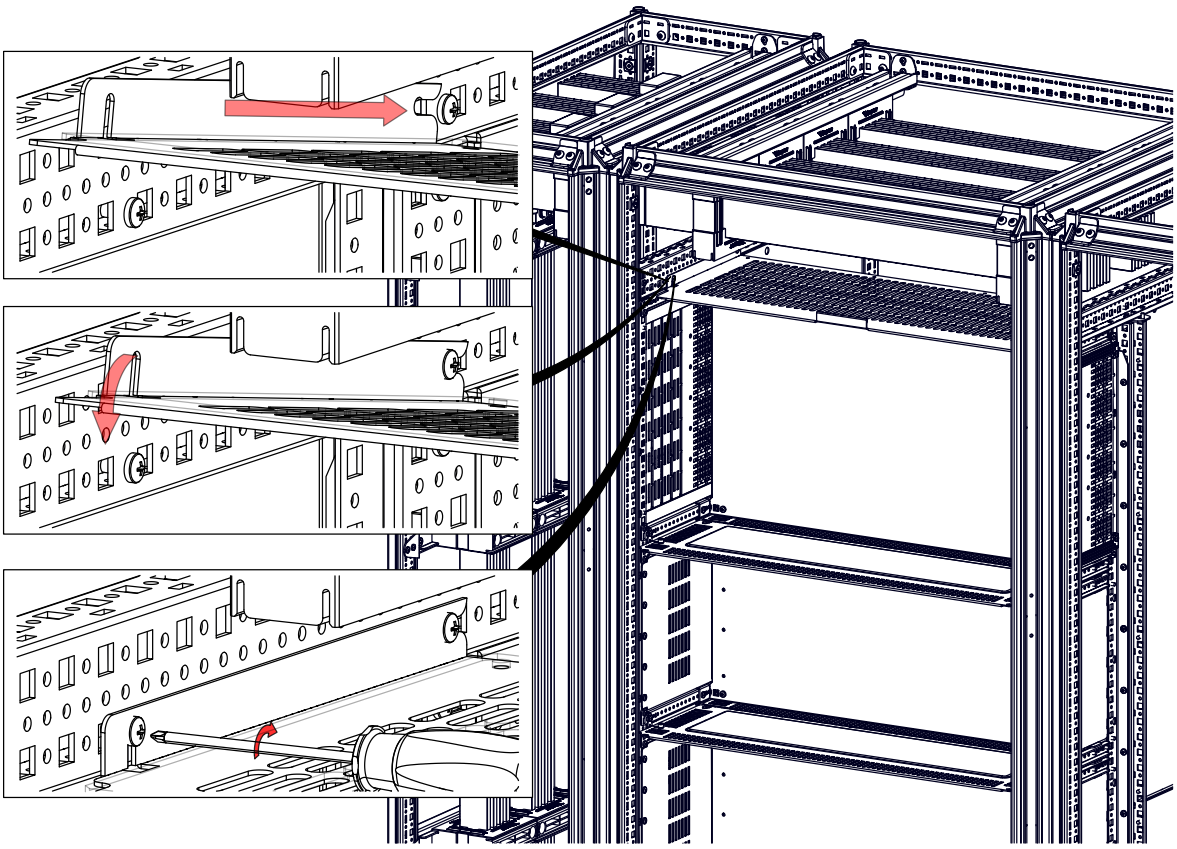

7.2 BUSBAR SEPARATION COVER ASSEMBLY

Required Packages:
400W:1013.040
600W:1013.060
800W:1013.080

M5X10
4 pcs.

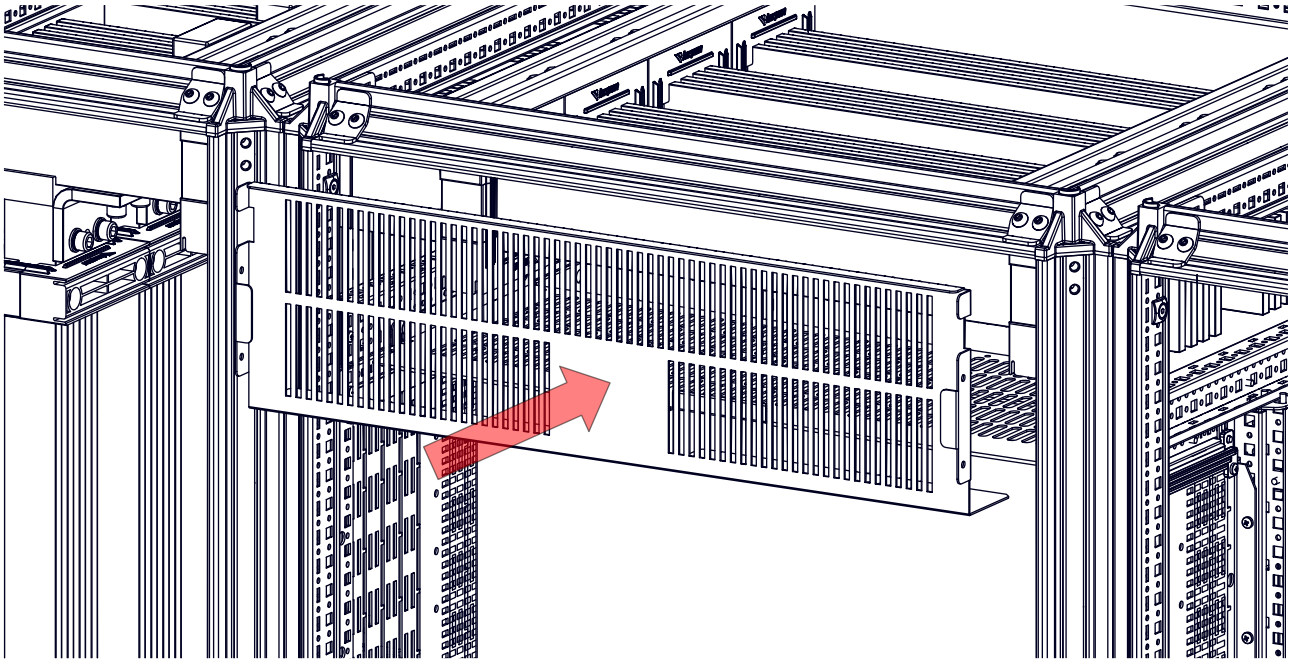

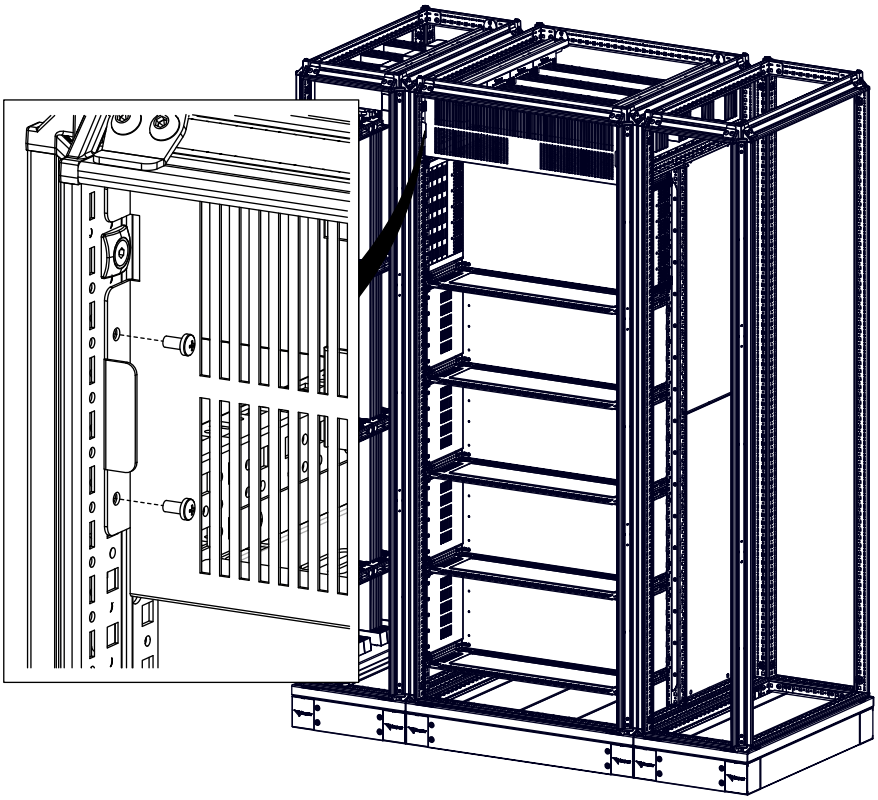

8. TOP COVER ASSEMBLY

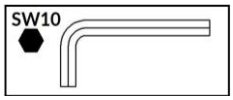

Warning: This assembly step must be apply after cassette assembly (internal part assembly).

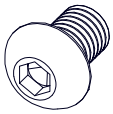

M12x30
4 pcs.

Without Baying Kit

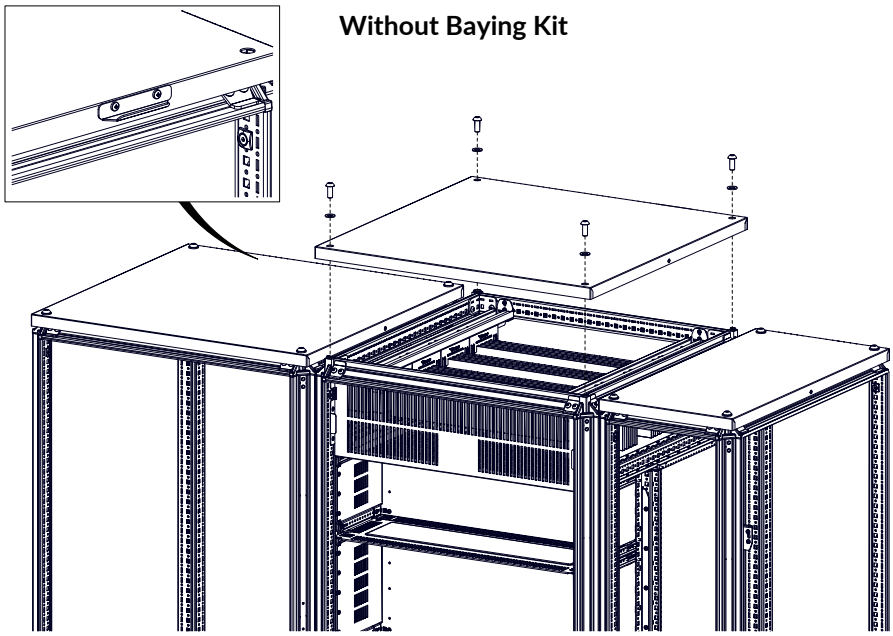

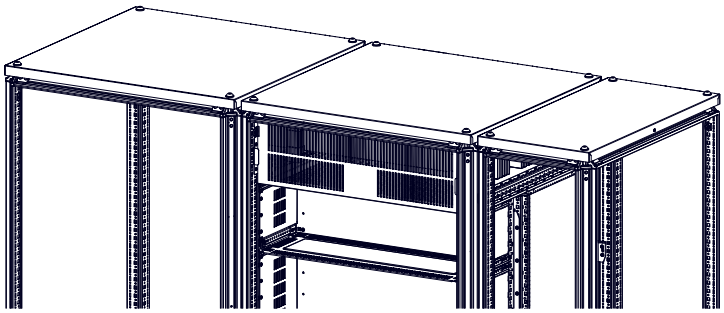

With Baying Kit

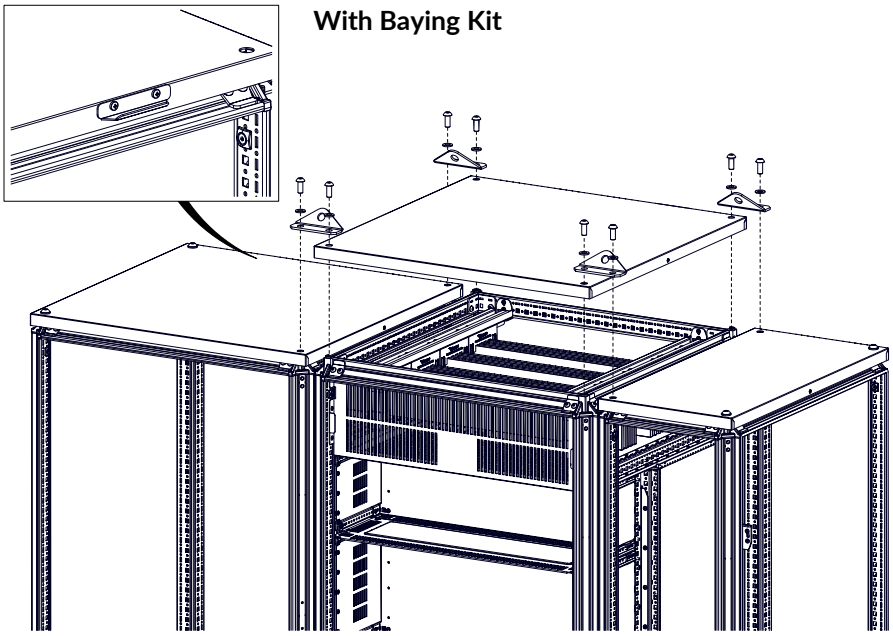

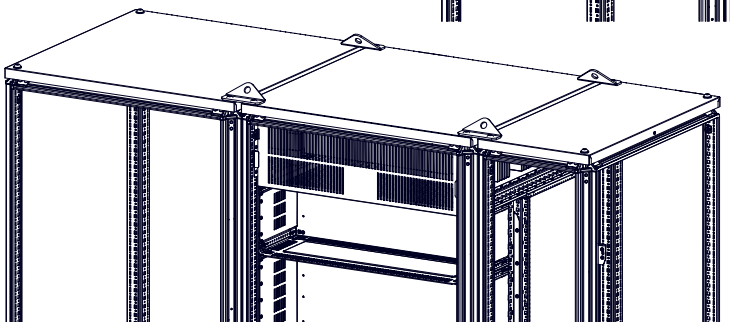

9. REAR PANEL ASSEMBLY

Warning: This assembly step must be apply after cassette assembly (internal part assembly).

Required Packages:
1003.X20

M5X10

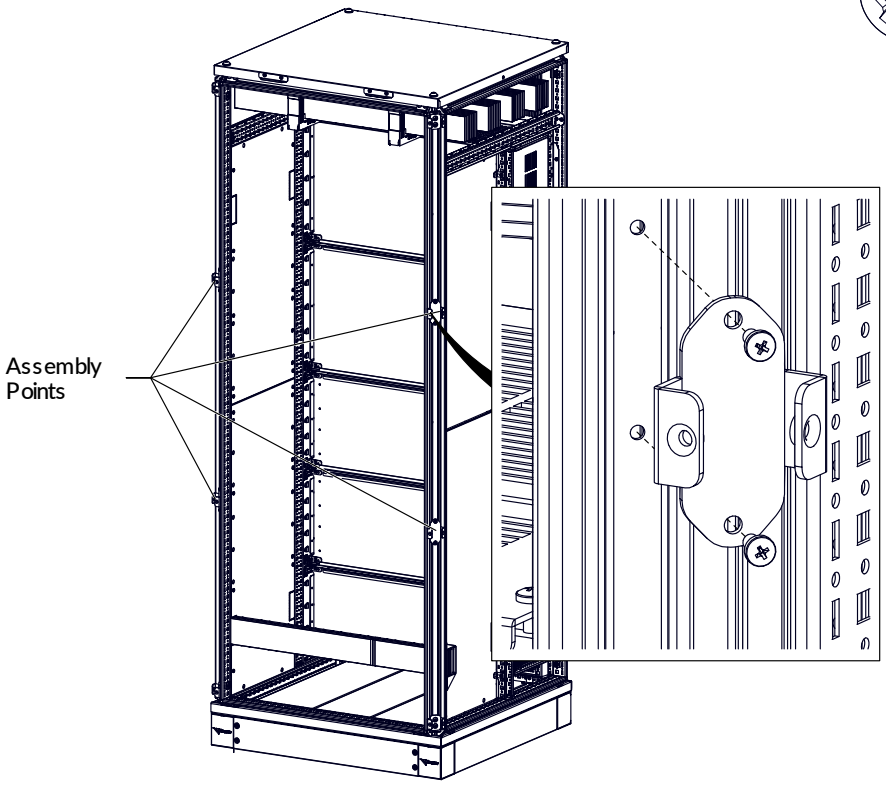

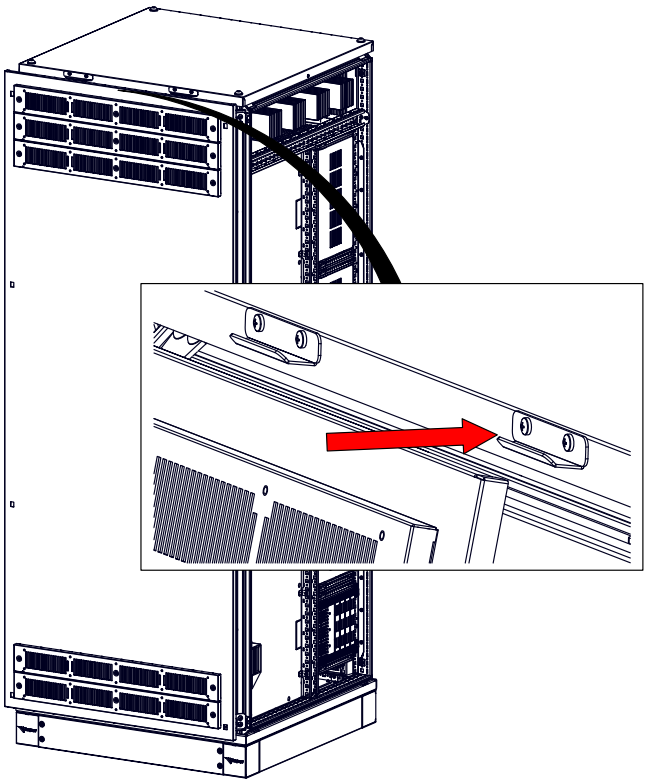

9. REAR PANEL ASSEMBLY

M6x23
8 pcs.

Required Packages:
1003.X20

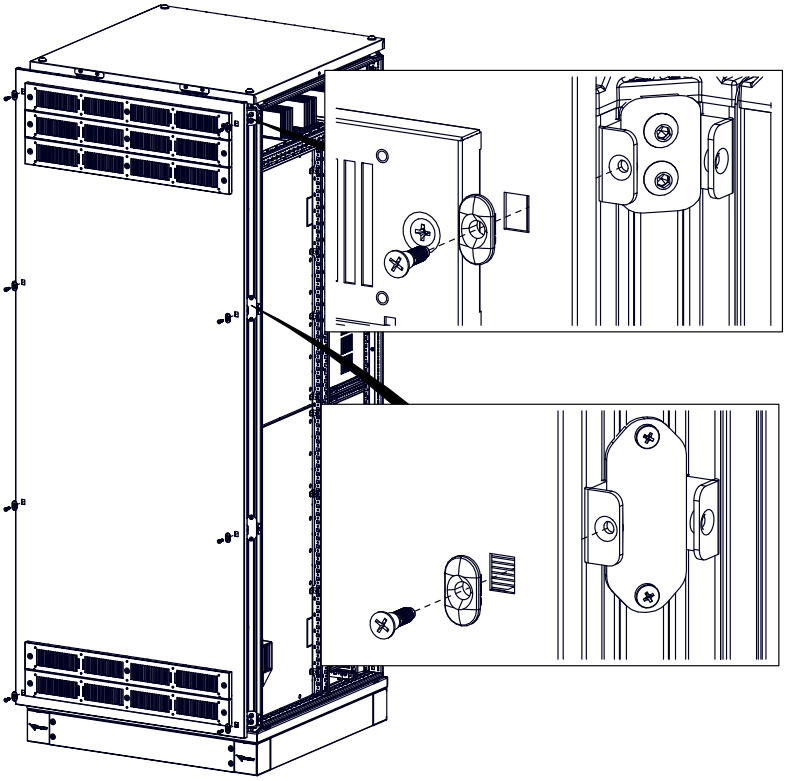

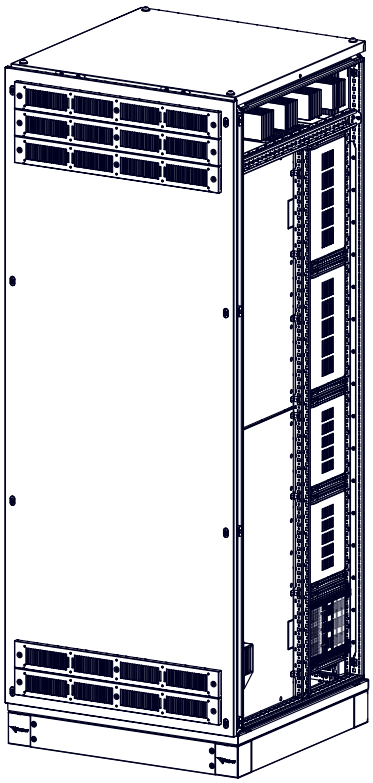

10. EXTERNAL PARTIAL DOOR ASSEMBLY

10.1 PARTIAL DOOR BRACKET ASSEMBLY

Required Packages:
1003.001

M5X10
8 pcs.

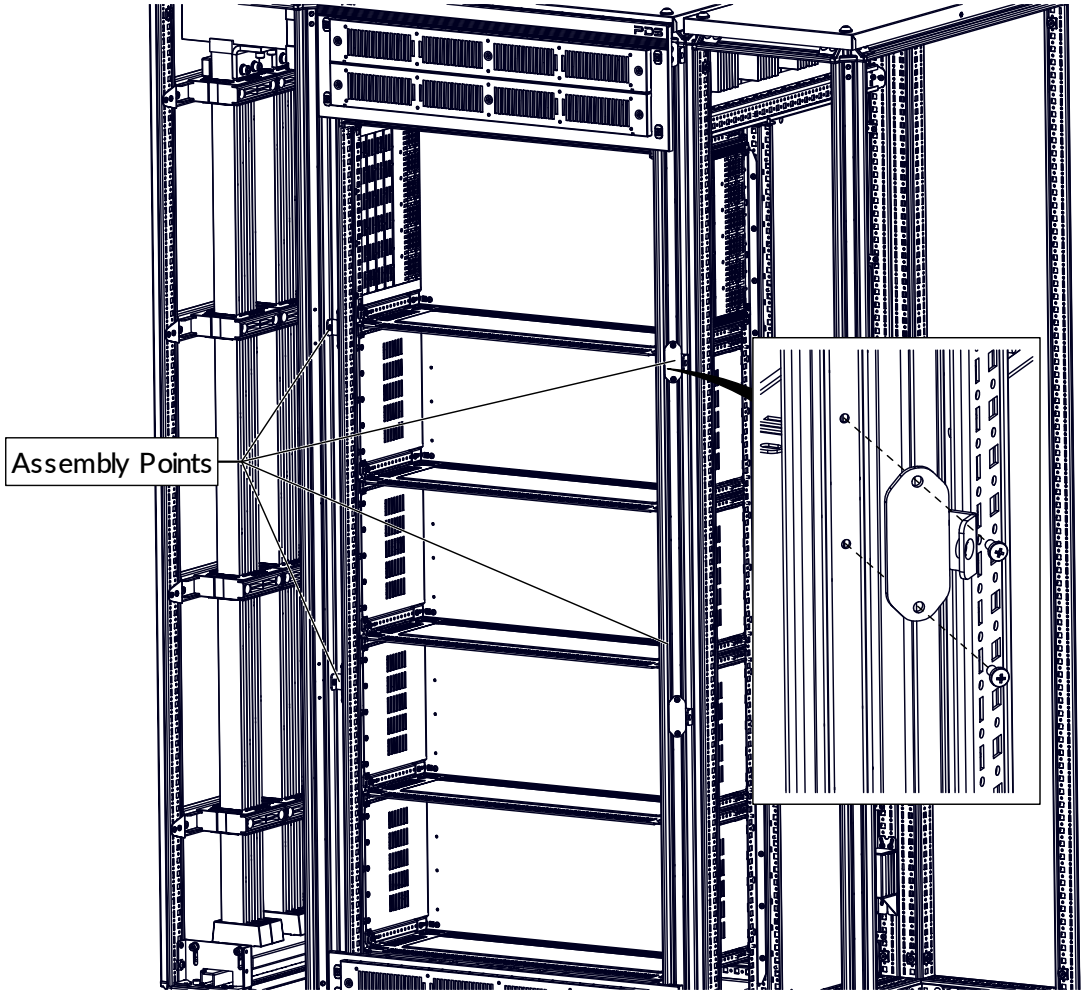

10.2 FIXED TOP PARTIAL COVER ASSEMBLY

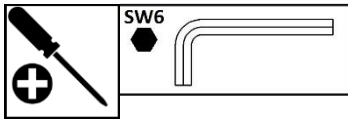

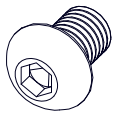

M8x12
4 pcs.

M5X10
4 pcs.

Warning: This assembly step must be apply after cassette assembly (internal part assembly).

Required Packages:
1016.X20

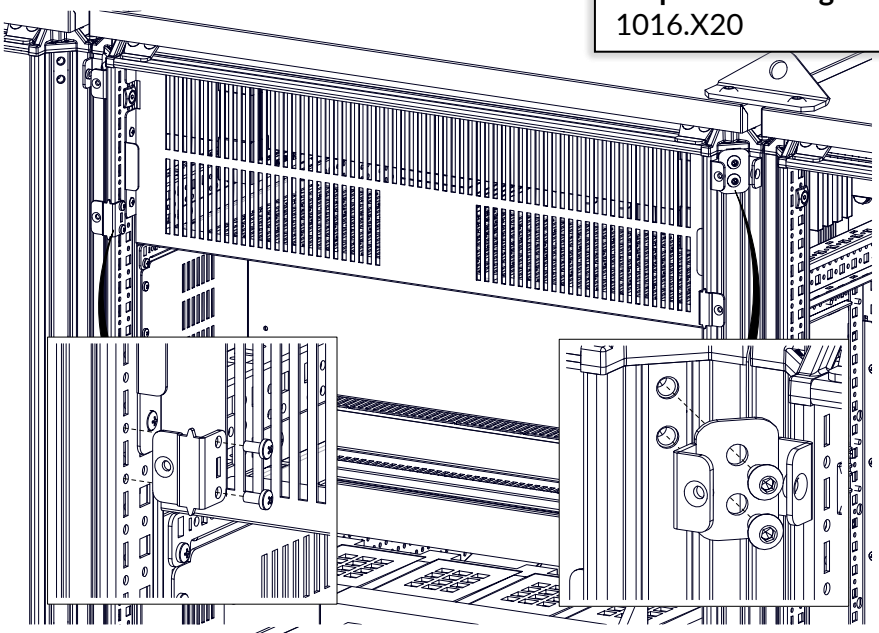

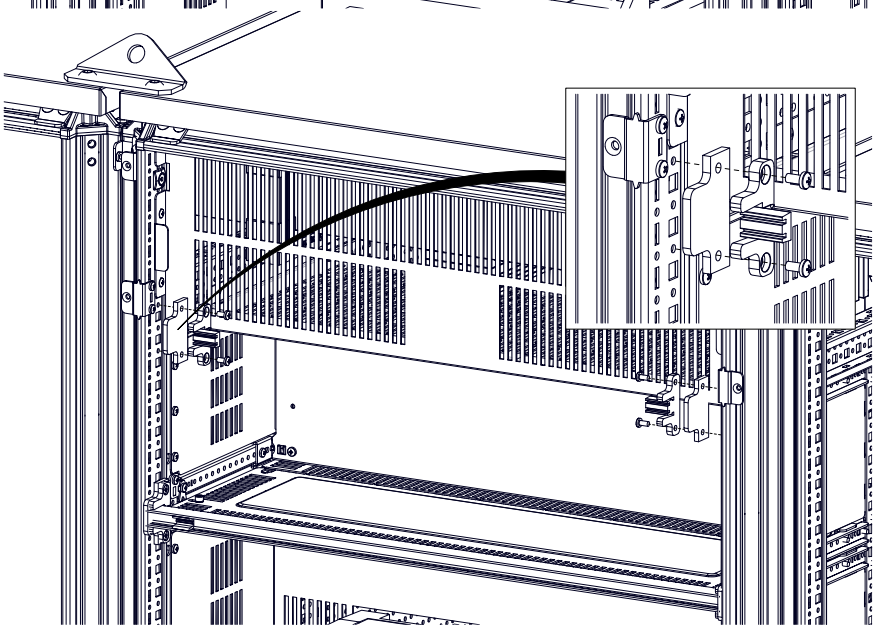

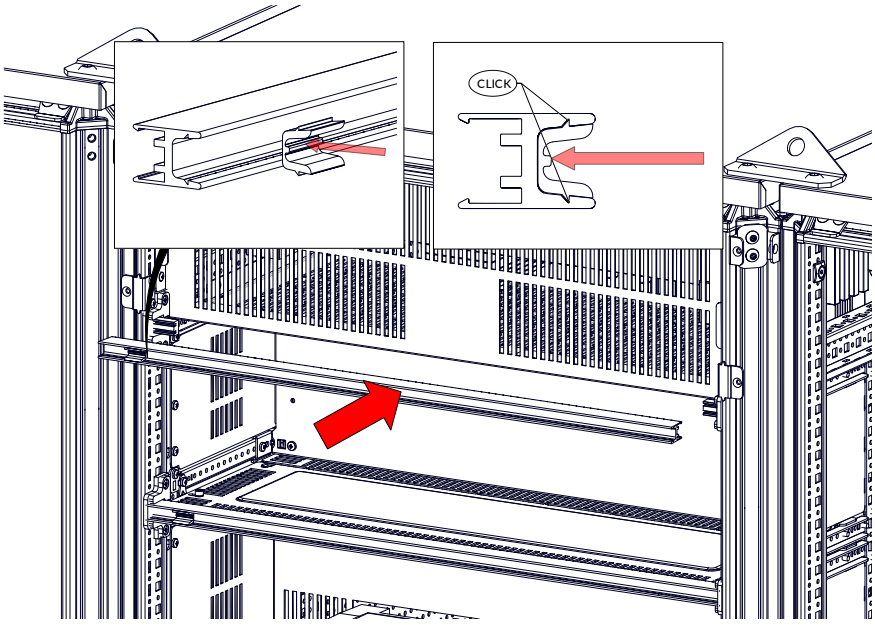

10.2 FIXED TOP PARTIAL COVER ASSEMBLY

Required Packages:
1016.X20

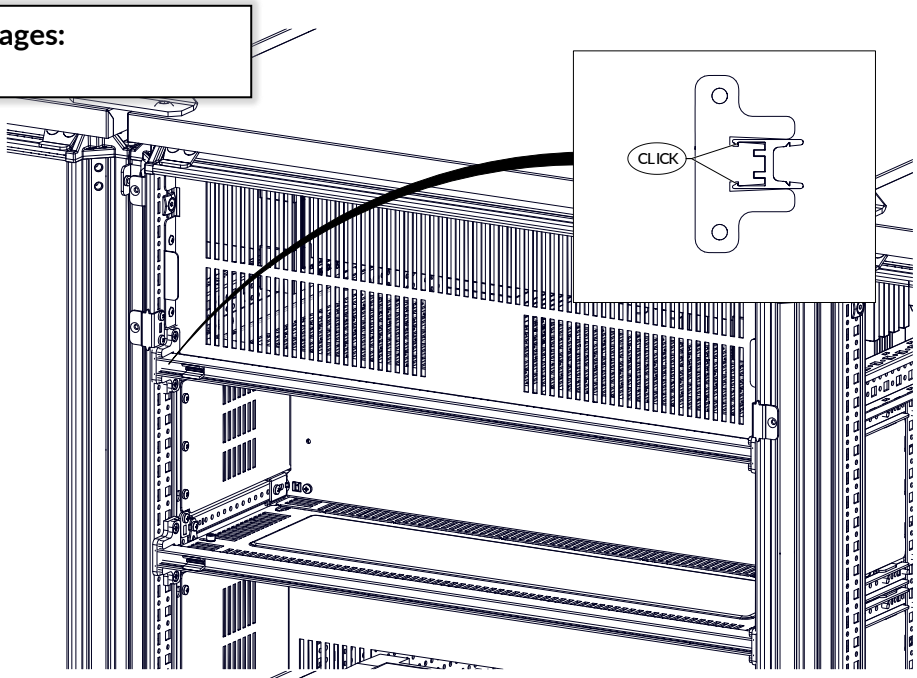

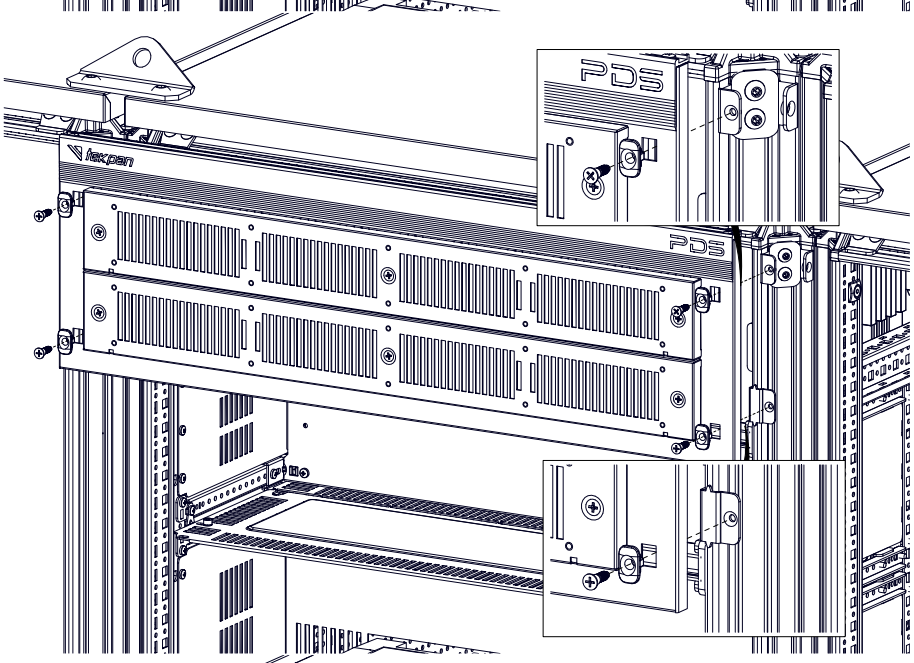

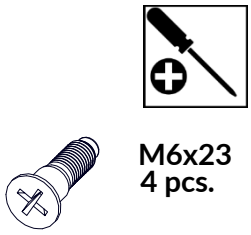

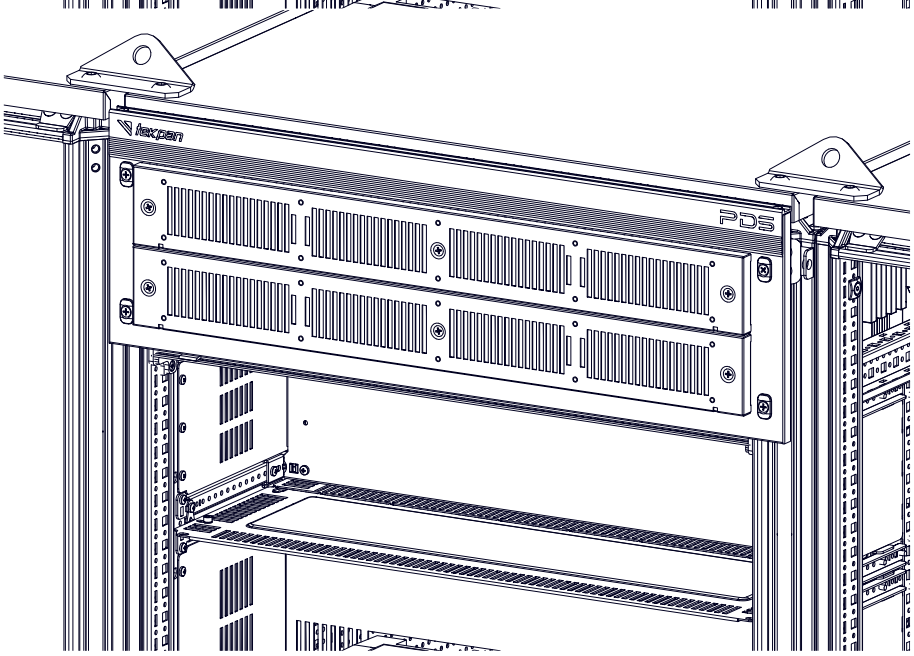

10.3 FIXED BOTTOM PARTIAL COVER ASSEMBLY

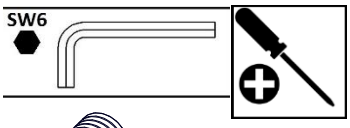

Warning: This assembly step must be apply after cassette assembly (internal part assembly).

Required Packages:
1018.XXX

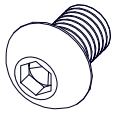

M8x12
4 pcs.

M5X10
4 pcs.

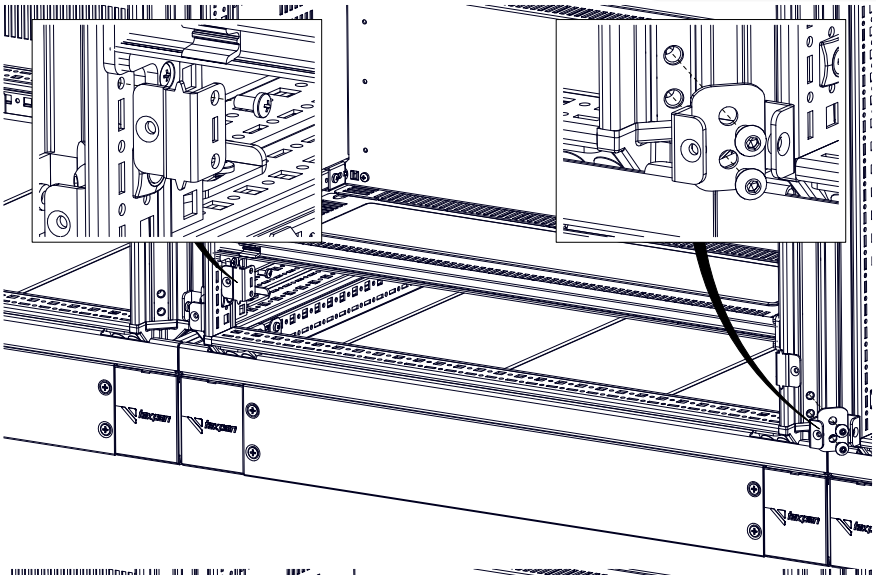

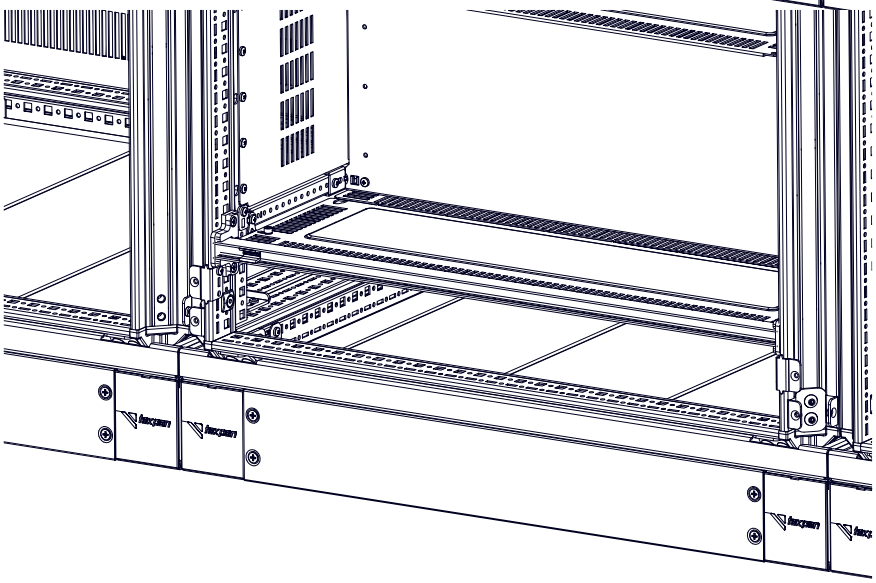

M6x23
4 pcs.

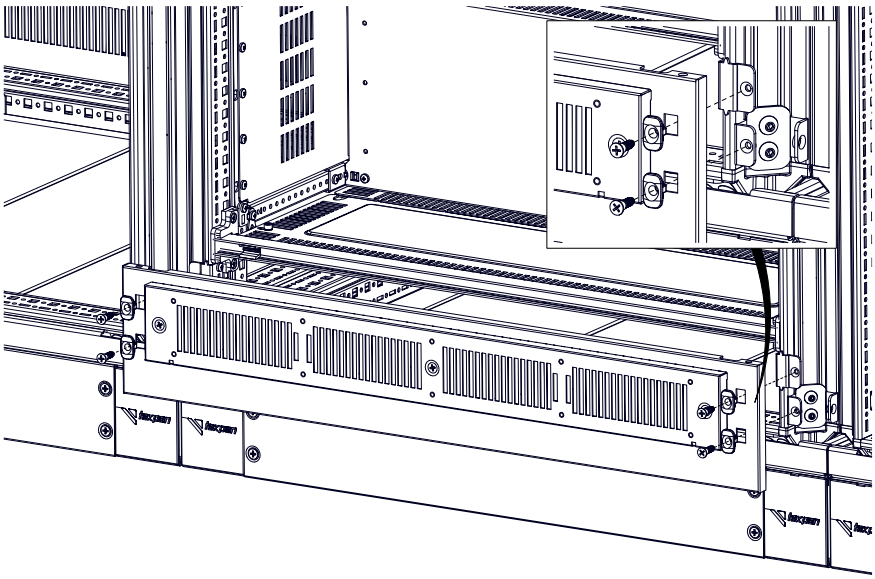

11. INTERNAL PANEL FRAME ASSEMBLY

Warning: This assembly step must be apply after cassette assembly (internal part assembly).

Required Packages:
1007.X18

M5X10

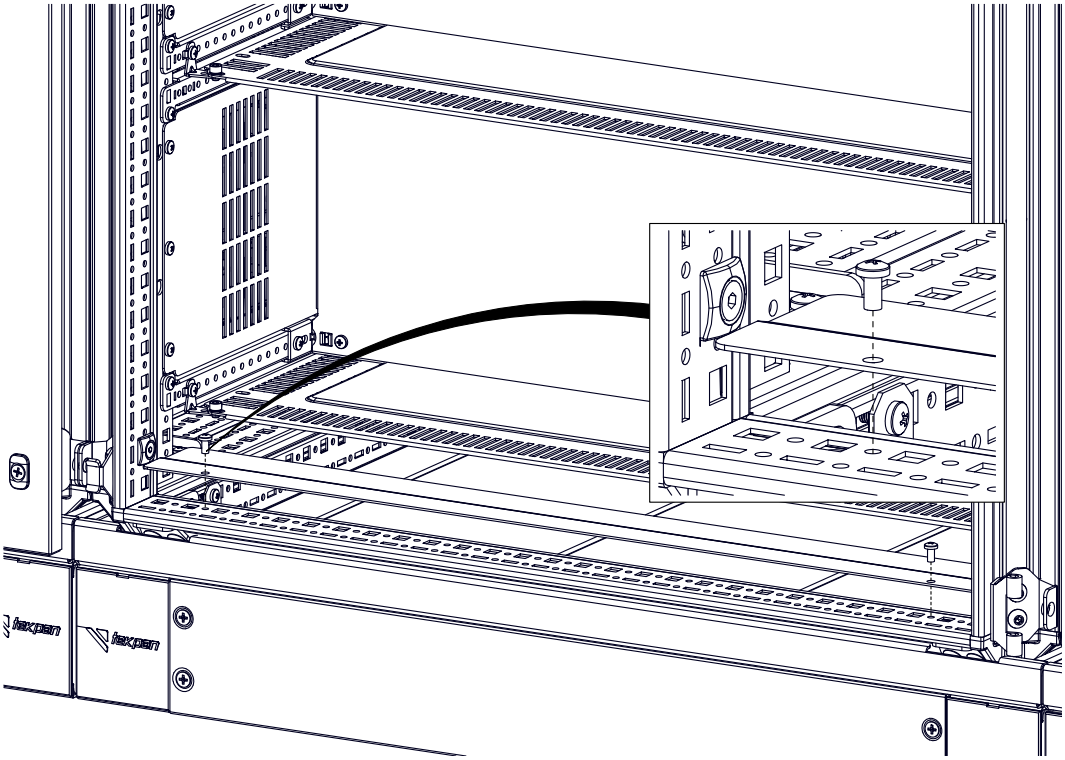

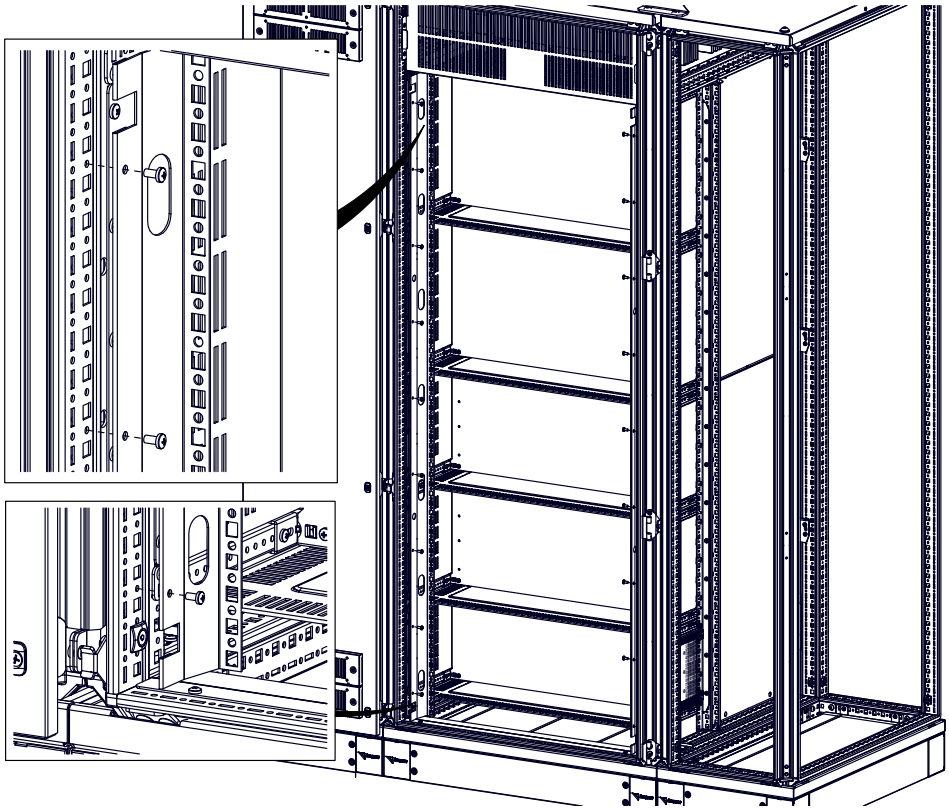

11. INTERNAL PANEL FRAME ASSEMBLY

Required Packages:
1007.X18

M6 Knob Bolt

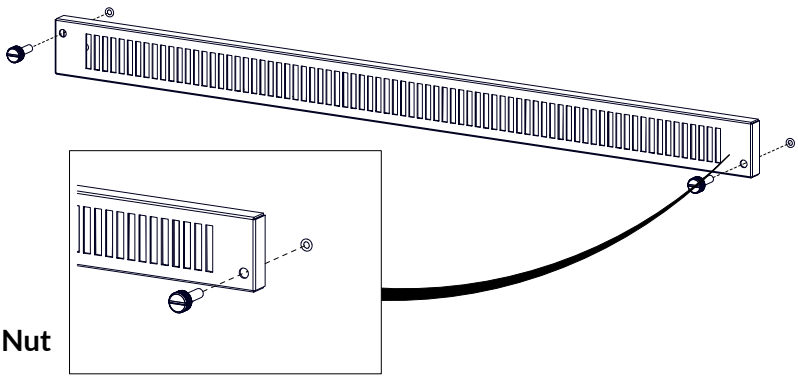

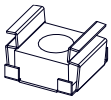

M6 Cage Nut

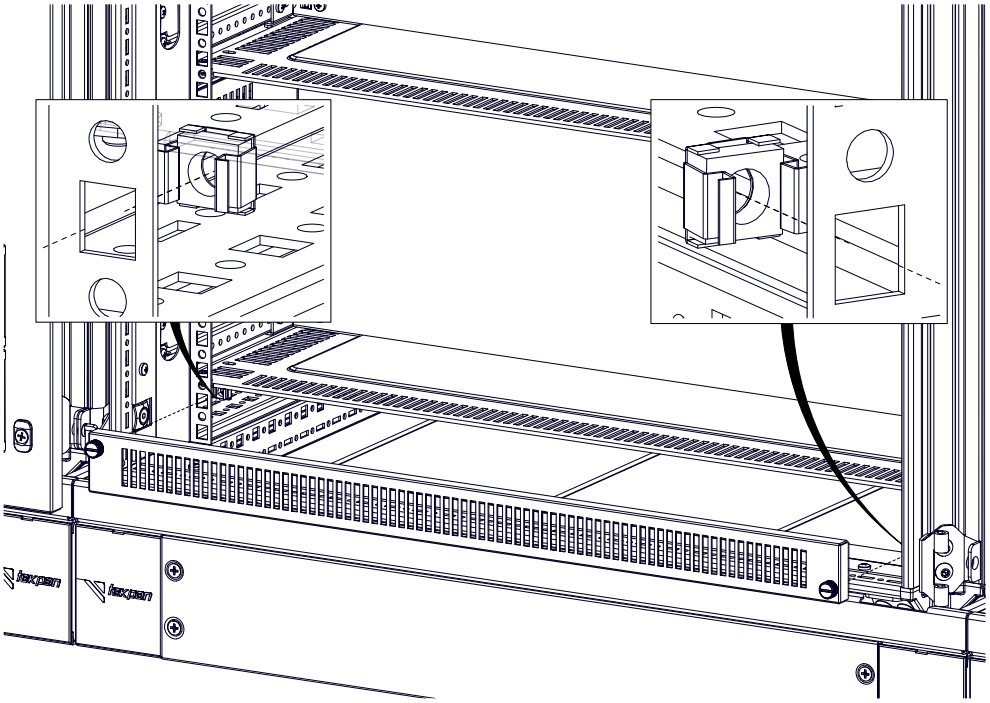

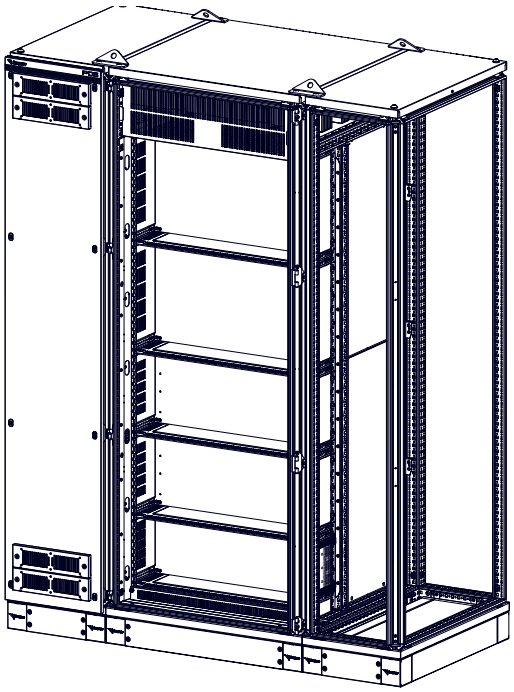

12. SOLID/GLAZED DOOR ASSEMBLY

Required Packages:
Solid:1002.X20
Glazed:1002.X21

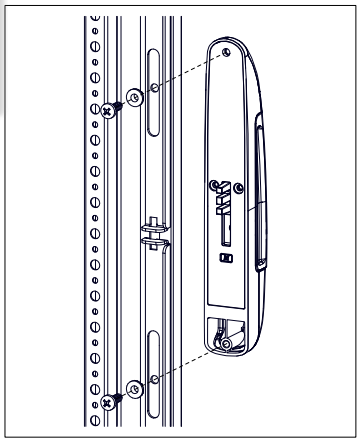

Glazed Door

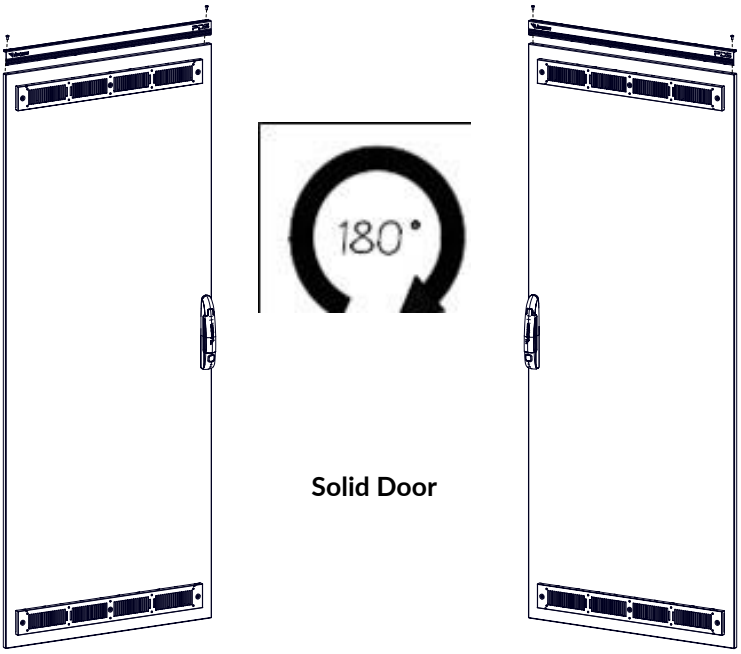

Solid Door

12. SOLID/GLAZED DOOR ASSEMBLY

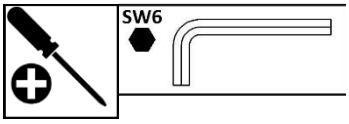

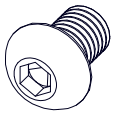

M8x12
8 pcs.

M5X10
8 pcs.

Required Packages:
Solid:1002.X20
Glazed:1002.X21

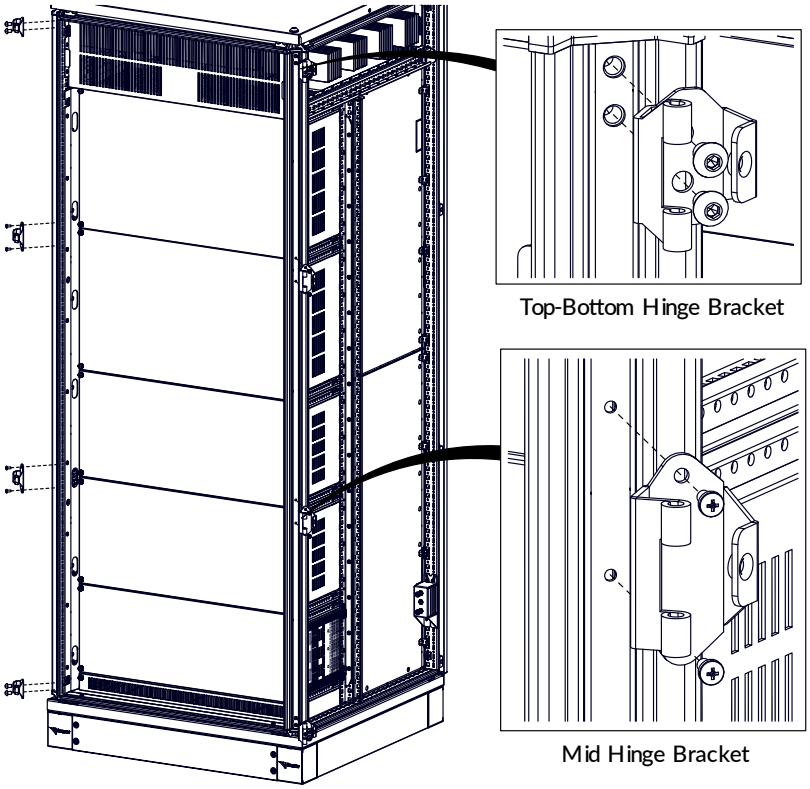

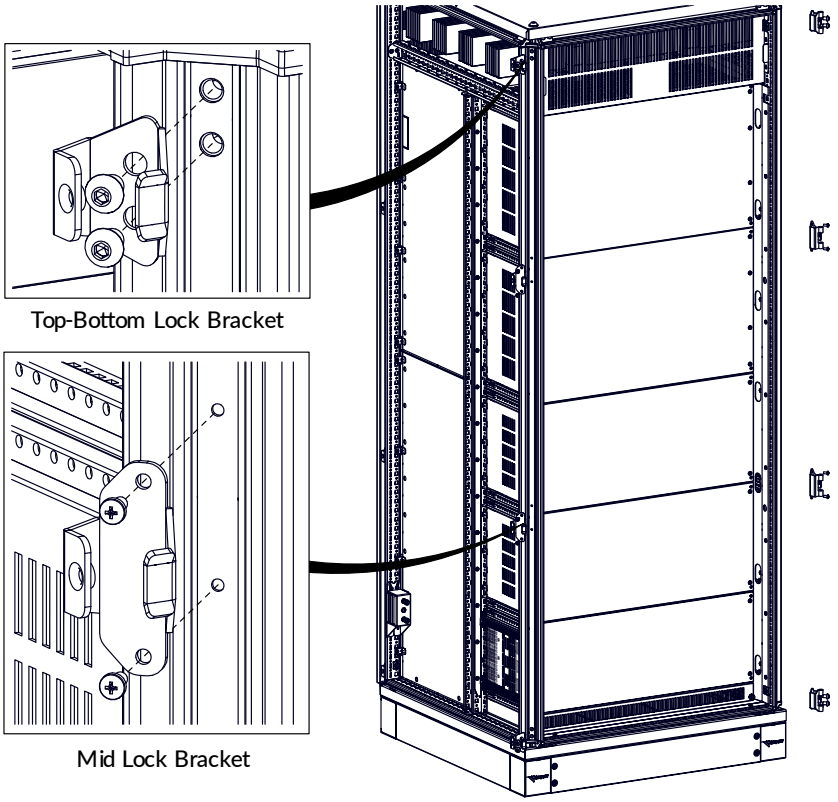

12. SOLID/GLAZED DOOR ASSEMBLY

Required Packages:
Solid:1002.X20
Glazed:1002.X21

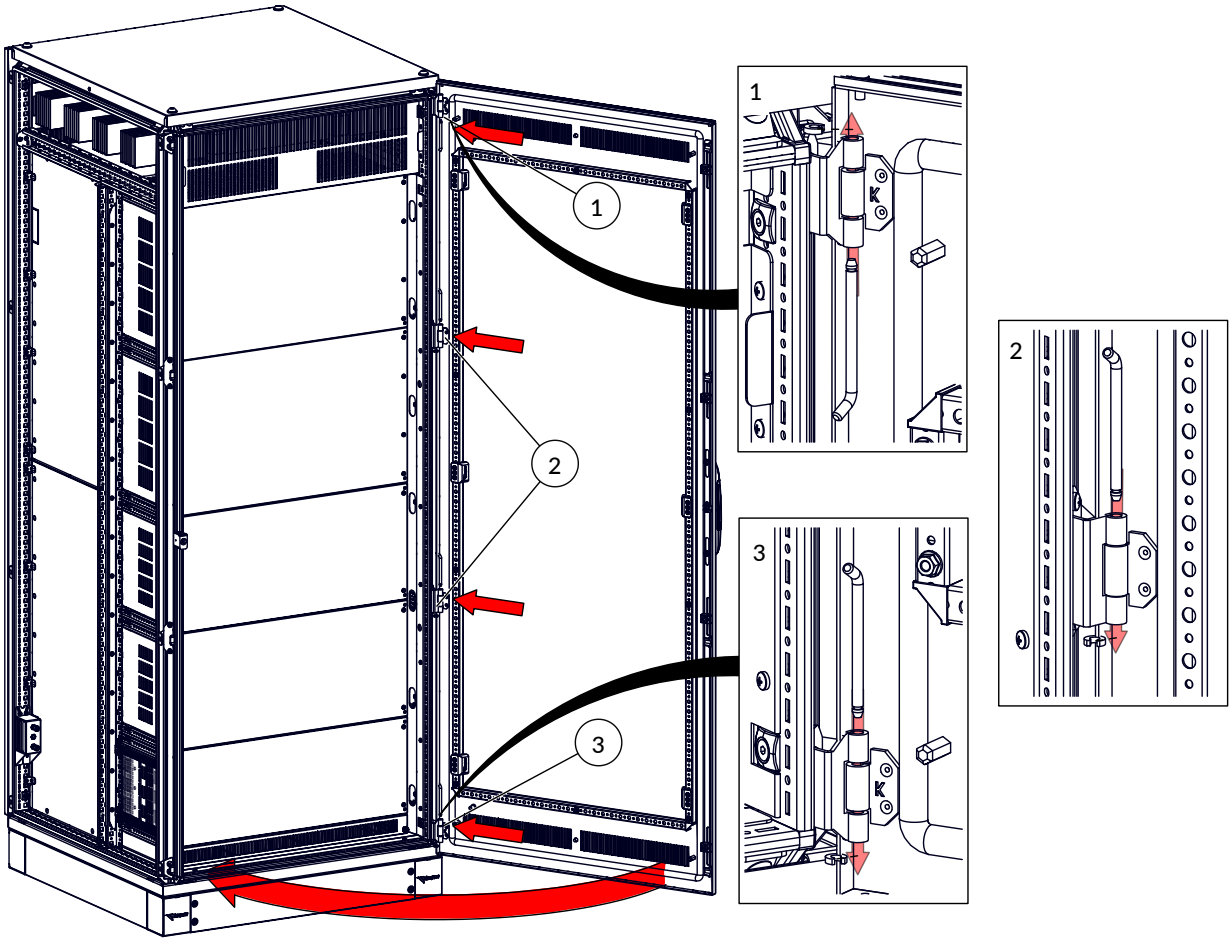

13. SIDE PANEL ASSEMBLY

Required Packages:
Side Panel:706.2XX
Busbar Protection:1023.1XX

M6x23
8 pcs.

M5x25
1 pcs.

M5X25 Only For 800 Depth!!!

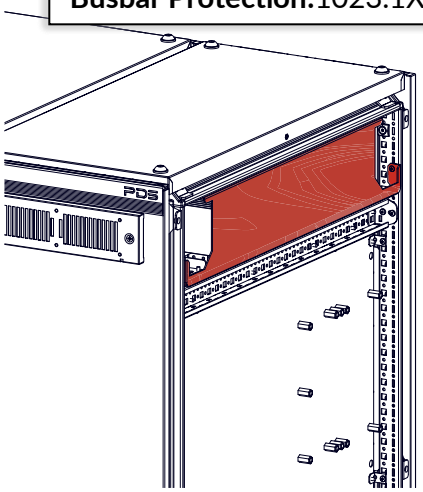

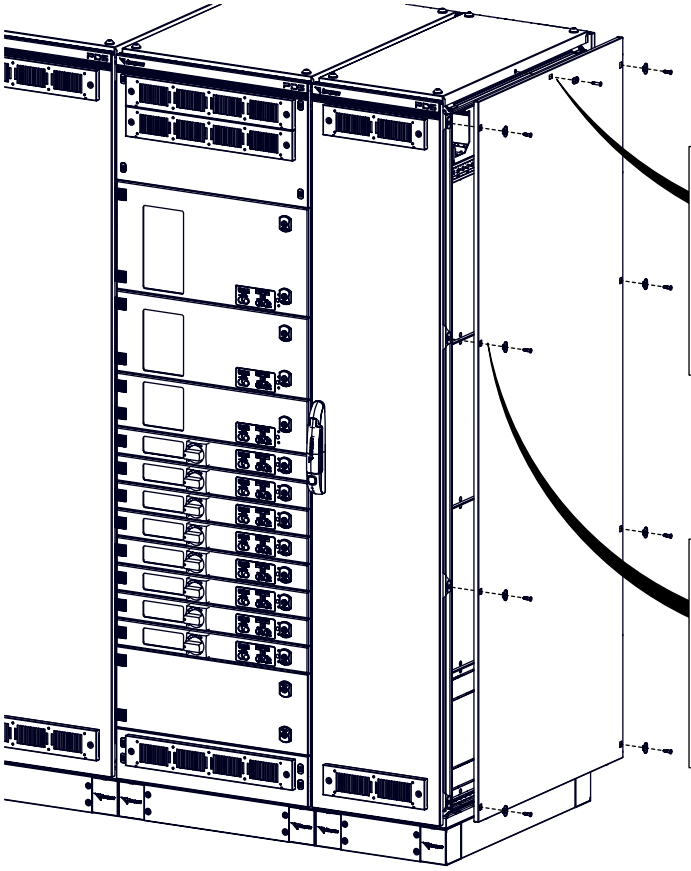

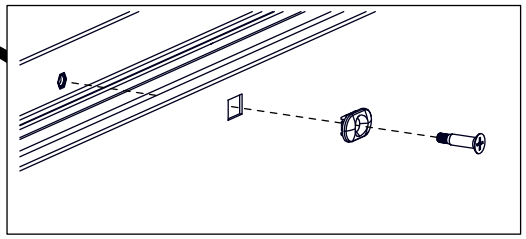

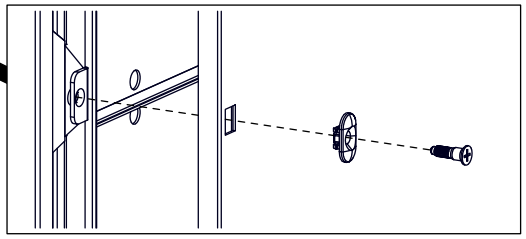

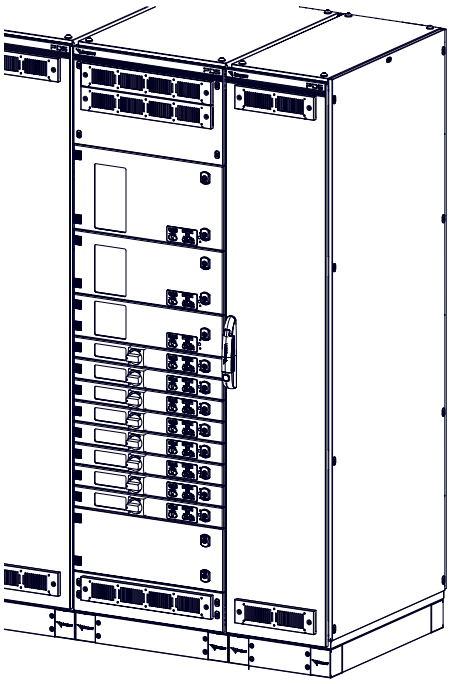

B2.6

tekpan®
INDUSTRIAL ENCLOSURES & CABINETS